EN

User's manual

with installation instructions

for AUTOTERM air heaters

AIR-2D 12V/24V AIR-4D 12V/24V
AIR-8D 12V/24V AIR-9D 12V/24V
PLANAR series.

Manufacturer: ADVERS LLC
Novo-Sadovaja str. 106, 443068, Samara, Russia
www.autoterm.ru
Representative office of manufacturer: AUTOTERM LLC
Paleju 72, Marupe, Latvia, LV-2167
Warranty Department warranty@autoterm-europe.com
Technical Support service@autoterm-europe.com
www.autoterm-europe.com

v12.2018-1

Table of contents

Introduction 3
1 General instructions and operating principle 4
2 Safety precautions 5
Retrofitting 6
3 Main requirements of installation of assemblies and units of the heater 7
3.1 Installation of the heater 8
3.2 Installation of the air intake pipe. 11
3.3 Installation of the exhaust pipe 13
3.4 Installation of the fuel system. 16
3.5 Installation of wiring of the heater. 20
3.6 Installation of the temperature sensor (optional) 21
3.7 Installation of the control panel. 21
4 Testing of the heater after installation and first launch 22
4.1 Automatic Control Features 23
5 Installation of air ducts. 23
6 Recommendations 26
7 Malfunctions. 28
8 Warranty Terms 30
Annex 1: Basic parameters & specifications of heaters 31
Annex 2: Connection diagrams of heaters 33
Annex 3: Size and dimensions of heaters 35
Annex 4: Electrical wiring diagrams of heaters 37

Dear Customer!

Thank you for choosing AUTOTERM AIR heater! We are doing everything to make this product meet your requirements, so its quality satisfies every customer.

Introduction

This manual is intended for organizations that specialize in installation and maintenance of air heaters AUTOTERM AIR (2D 12V/24V; 4D 12V/24V; 8D 12V/24V; 9D 12V/24V) (hereinafter referred to as heaters, or 2D, 4D, 8D and 9D for shorter)) and users of the product after installation. The document covers main rules of installation of the product on different land vehicles and small maritime transport (e.g. yacht, boat, cutter), function tests of the product after installation and basic maintenance procedures to ensure reliable operation of the heater.

Please read this manual before installing and/or operating the AIR heaters. This manual contains needful information in order to use this product correctly. Disregard of these instructions can void the warranty of the product, lead to damage of product and/or property and be a risk to health.

1 General instructions and operating principle

The AUTOTERM AIR heaters are designed to be used:

- for heating of various confined spaces, of vehicles for example driver's cabin or cargo compartment of vans or trucks at ambient temperatures up to -45°C.;
- for heating cabins, cargo compartments and other various confined spaces of maritime transport;

The heater operates independently of the vehicle engine.

Heaters built-in fan draws air through the air intake opening. The air heated by the heater is channelled to cabins and desired spaces via outlet channels.

Fuel is supplied by a separate fuel pump from the fuel tank of the vehicle or vessel or from an additional fuel tank.

The heater can be powered by a battery of the vehicle or a separate battery.

Temperature in rooms can be regulated by using a temperature sensor and a control panel, which sets heating parameters.

When a temperature sensor is present (either built in to the control panel or additionally installed), the heater is constantly comparing the actual temperature with the set temperature and automatically adjusts the heating capacity according to the heat demand

Installation of the heater and its components **must be carried out by specialized organizations** approved by AUTOTERM. Installation of the heater must be carried out **only by certified specialists** in accordance with the installation instructions.

If the heater is handled and/or installed improperly, there is a **possibility of a fire hazard** and **damage of property** because fuel and electrical components are being used. That is why all safety precautions and installation instructions must be observed.

Basic parameters and specifications of the heaters can be found at the end of this manual (*see Annex 1*).

2 Safety precautions

- Do not use or install the heater in places, where flammable vapors or gases or large amounts of dust may form and accumulate.
- Disable the heater, when the vehicle or vessel is being fueled.
- Do not cover the heater with clothing, pieces of fabric and so on, and do not place such objects in front of the air intake pipe or inlet and output of the heated air.
- Do not install the fuel line inside the cabin of a vehicle.
- **The installation arrangement must exclude the possibility of contact of the exhaust pipe with the air intake, fuel pipe, or other flammable objects.**
- The vehicle where the heater is installed must be equipped with a fire extinguisher.

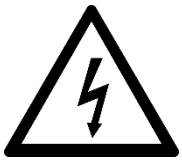

- Do not install electric wiring (harnesses) of the heater near the fuel line and the exhaust pipe.
- Disconnect the heater from its battery during repair works on the heater.
- Do not connect the heater to the power circuit of the vessel, when the engine is operating and there is no battery.
- Do not connect or disconnect connectors of the heater, when the heater is powered.
- When electric welding is carried out on the vehicle, or repair work is made on the heater, the heater must be disconnected from the battery.
- Do not use fuses rated differently from indicated on the electric circuit diagram.
- Do not use makeshift devices (wires etc.) instead of fuses.

- Take the safety precautions, which must be observed when working with an electrical and fuel systems, when installing and dismantling the heater.
- **Do not disconnect the heater from power before the purge cycle ends.**
- When the heater has been switched off, do not switch it on again for 5-10 seconds.
- Do not step on the heater or put any objects on it and in it.
- **Electric wiring, the air intake, and the fuel pipe must be protected from contact with sharp edges of vehicle structures.**

- For safety reasons, contact the service shop to troubleshoot the heater if it fails to launch two times in a row.
- In case of faults in the operation of the heater, contact specialized repair organizations authorized by AUTOTERM.

If the consumer fails to follow the requirements above, the warranty of the heater becomes null and void.

Retrofitting

For replacing different brand of heater for an AUTOTERM AIR heater, following things must to be checked first:

➔ Diameter of exhaust pipe.

The AIR-2D and AIR-4D have an exhaust pipe with an internal diameter of 24mm and AIR-8D and AIR-9D have an exhaust pipe with an internal diameter of 38mm.

Some brands use different diameter exhaust pipes, if so, it needs to be changed to necessary diameter suitable for the heater in use. Larger diameters can be used, if needed. (see *"Section 3.3"*, for more information on installing the exhaust pipe).

Disregard of this advice can lead to insufficient output of exhaust gases due to backpressure, thus damaging the heater.

➔ Fuel system.

When retrofitting a heater, all old fuel pipes and fuel pumps must be removed completely and suitable fuel system for AUTOTERM AIR heater must be installed instead.

Different brands of fuel pumps can have different fuel output and fuel pipes can be in different diameter. (see *"Section 3.4"*, for more information on installing the fuel system).

Disregard of this advice can cause fuel overflow in the heater or insufficient flow of fuel, thus damaging the heater.

➔ Electrical wiring.

All old wiring, electrical connections, control panels, etc. must be removed and installed with new AUTOTERM AIR suitable components. (see "*Section 3.5"*, for more information on installing the wiring of the heater).

Electrical related faults are common when using different and unsuitable electrical components.

➔ Diameter of air ducts.

At least 60mm air duct must be used for AIR-2D, at least 90mm air duct for AIR-4D, and at least 100mm for AIR-9D. If the existing air duct is smaller in diameter, then everything must be changed up to the first branch with the necessary diameter and as well as the first hot air outlet. After that the size of air duct can be decreased using different adapters (see *"Section 5"*, for more information on air ducting).

Disregard of this advice can cause the heater to overheat, thus damaging it.

DO NOT connect air ducts to AIR-8D.

3 Main requirements of installation of assemblies and units of the heater

Heater can be installed both inside, and outside of the vehicle. Install the heater in a dry place that is protected from ingress of water and condensate, dirt, excessive vibrations and heat emissions, engine emissions or fuel or oil contamination.

Installing the heater on a maritime transport it must be protected from ingress of overboard water.
Consider the maximum heel of the vessel. A heel must not bring overboard water into the discharge channel for exhaust gases, and bilge or overboard water must not get on the heater.

Installing the heater in a cargo hold of the vehicle, install the heater at a height and location that prevents contact with cargo and in a way that the cargo would not obstruct the intake/outlet of the heater.

The heater must be installed following safety requirements and taking into account the type of vehicle or vessel. Consider everything related to peripheral equipment, for example, the maximum permissible length of the exhaust gas channel and intake of air for combustion, the location of the passage in the board (for maritime transport), the layout and length of electric wires, distance from the fuel tank, layout of air ducts of warm air, intake of fresh air.

All precautions must be observed when installing the heater to reduce the risk of injuries to personnel or damage to the equipment as much as possible.

3.1 Installation of the heater

Install the heater, taking into consideration permissible operating position according to Fig.1a/b. Take into account the possible heel of the vessel, if installing on a maritime transport.

When heater is positioned with exhaust pipe facing downwards and air inlet facing towards you, it is considered 0° position. AIR-2D and AIR-4D can be tilted everything between 0 and 90°. From the same point of view, wires on the 2D and 4D must remain on the right side or on the top of the heater. **The AIR-8D and AIR-9D should not be tilted (see Fig.1a)**.

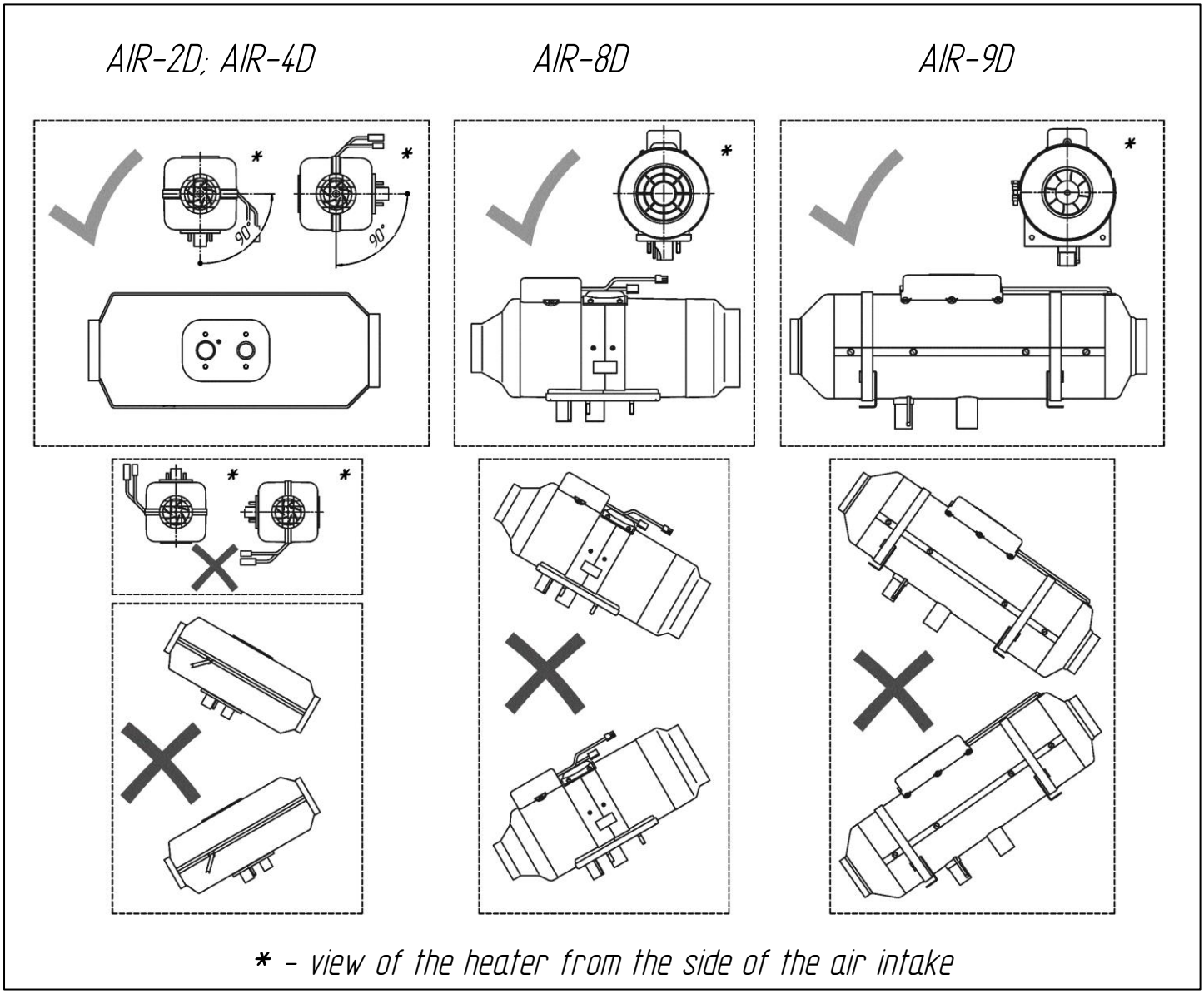

Fig. 1a - Mounting positions of the heater

WARNING!!! Reliable operation of the heater depends on correct installation of the heater. The heater must be installed horizontally (according to Fig.1a).

The distance from surrounding objects must be sufficient to ensure good ventilation. The distance from walls and partitions to the start of the inlet opening of the heater must be no less than **50mm for AIR-2D/4D** and **100mm for AIR-8D/9D** (see Fig.1b). The distance from walls, partitions to the start of the outlet opening of the heater must be no less than **150mm for AIR-2D/4D** and **250mm for AIR-8D/9D**. Provide protection from penetration of foreign objects into intake and output openings, when installing and operating the heater. Install the heater so that it is convenient to do maintenance works.

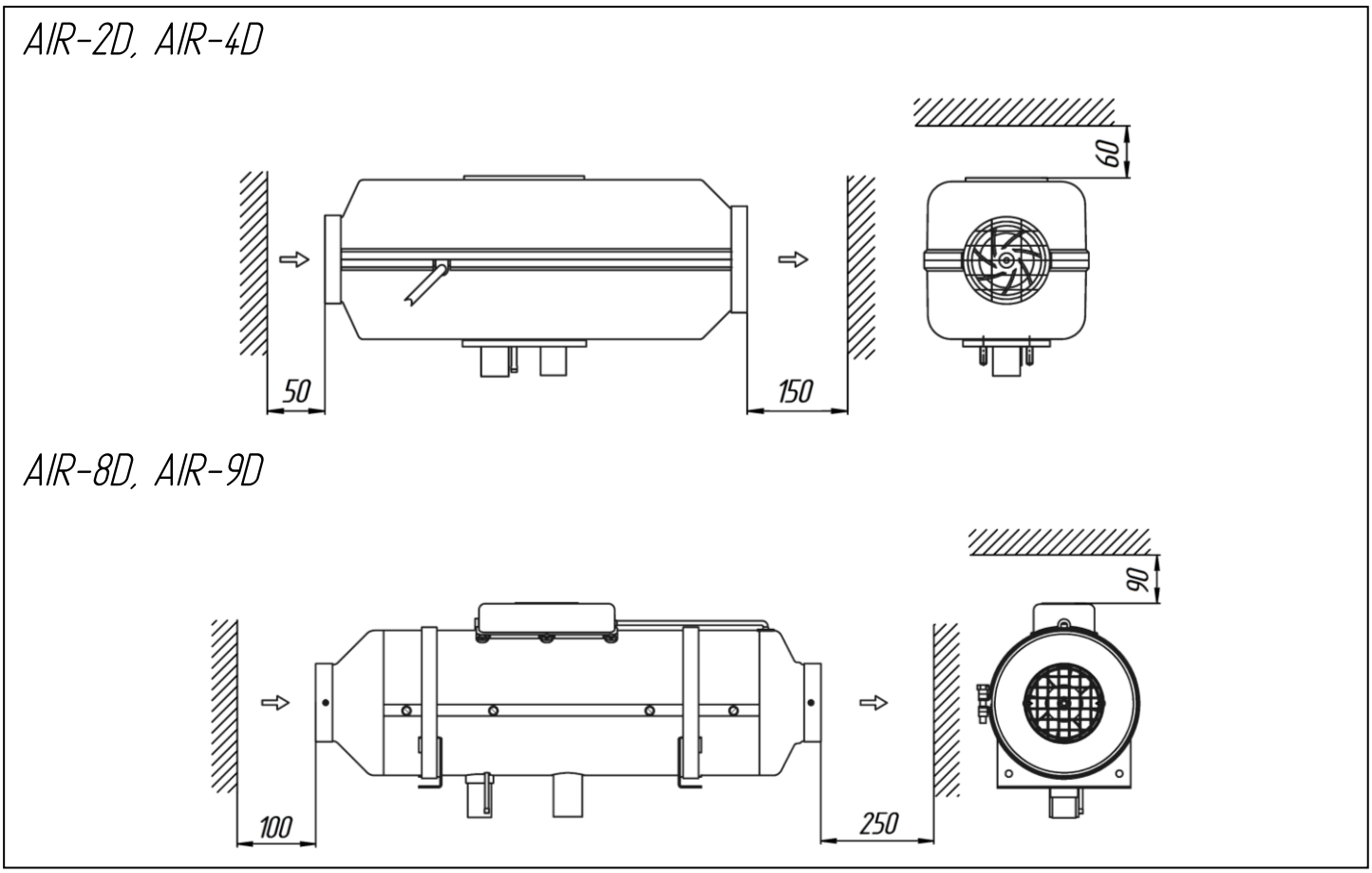

Fig. 1b – Distance from walls

For installing air ducts, these distances need to be considerably greater (see *"Section 5"*, for more information on air ducting).

DO NOT install near flammable or heat-sensitive objects such as sails, fenders, clothing, sheets, paper, gas pipelines, fuel tanks, etc.

When installing the heater, make sure that the mounting flange is the only place of contact with the mounting surface of the vehicle or vessel. The casing of the heater should not contact any surface (Fig.2b), to avoid deformation of the heater casing, jamming of the air blower fan and potential overheating.

Install the heater on a flat surface, because installing on uneven surface, can bend the casing of the heater, thus blocking the fan (common cause of error 27).

It is recommended to use an appropriate mounting bracket specific for desired mounting location (variety of mounting brackets can be purchased at your local dealer) and the rubber seal (seen in Fig. 2) for the installation surface of the heater, when installing the heater.

In case the heater is installed in a large passenger van or a bus, it may be installed without using mounting brackets.

In case the heater is installed onto a pedestal or a mounting bracket, cover the air intake, exhaust pipe, and the fuel pipe areas with a metal cover.

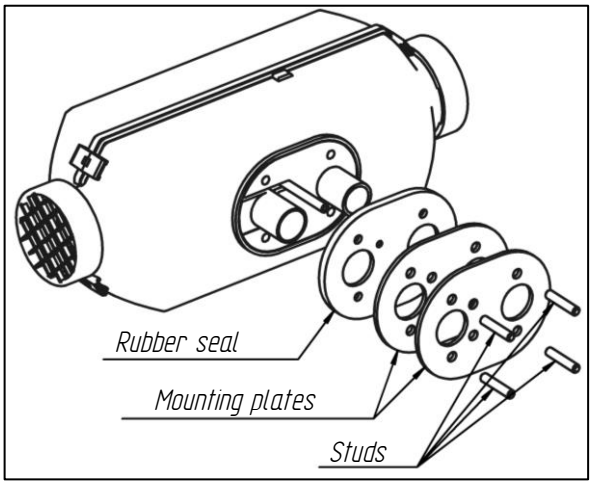

Fig. 2a - Mounting plates

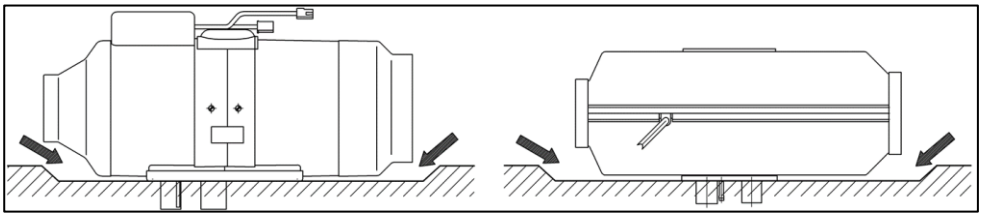

Fig. 2b - Leave some free space

For heaters AUTOTERM AIR-2D and AIR-4D, holes in the body of the vehicle should be made as shown in Fig.3. Heater can be installed using mounting plates shown on Fig. 2. In this case studs provided with heater must be replaced with longer studs.

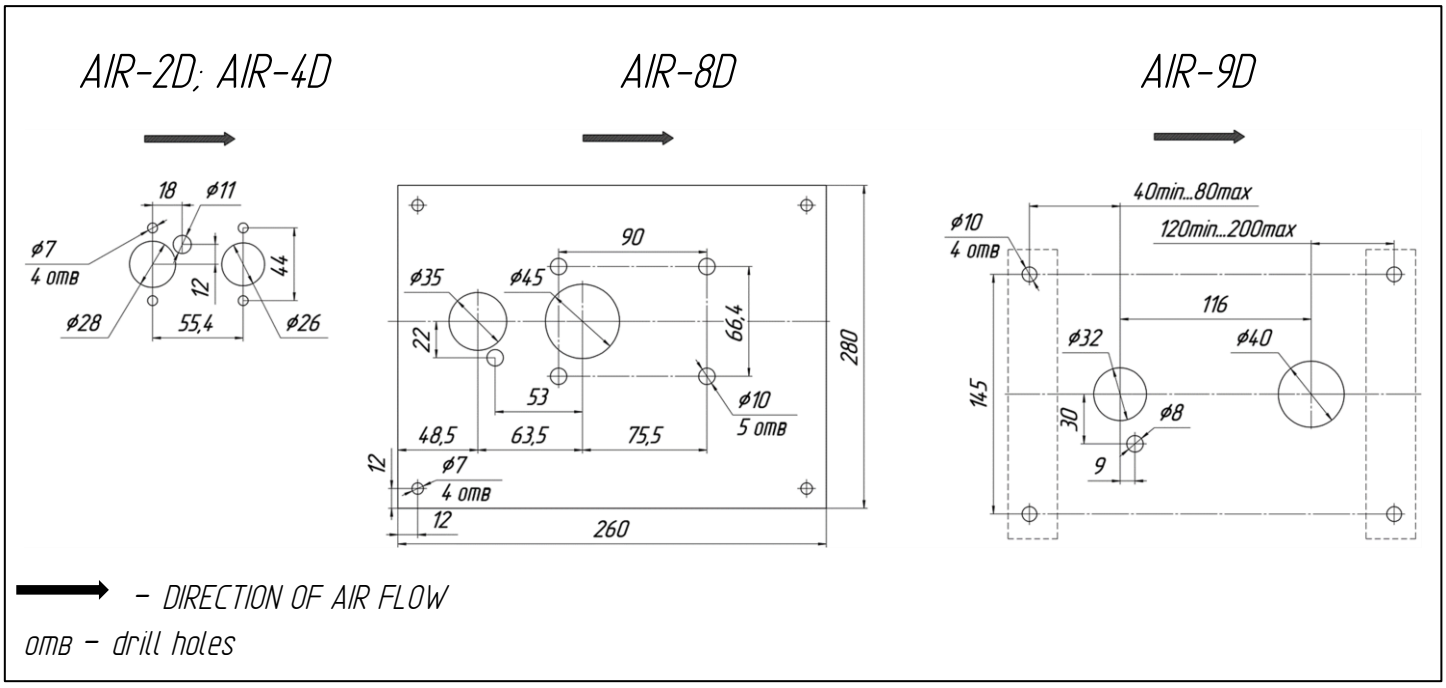

Fig. 3 – Mounting holes

Cut the opening inside the vehicle body (in case the side wall/floor is not thicker than 3 mm) for AIR-8D heater installation as shown on Fig. 3. With the thickness of the vehicle body (floor) of more than 3mm, installation of the heater requires the following:

1. Cut a rectangular hole in the vehicle body sized 180×95 mm
2. To attach the mounting bracket* to the heater (this bracket can be made of steel sheet at least 2.5mm thick);
3. Install the exhaust pipe, air intake, and fuel line to the heater and fasten the whole assembly to the body of the vehicle

*—*optional part*

3.2 Installation of the air intake pipe.

The air for combustion must not be taken from the interior, living space, engine or luggage compartment of the vehicle or vessel. Air should be taken from well-ventilated areas or from outside of the vehicle or vessel.

The maximum length of the air intake pipe is 2 meters. The air pipe must be as short as possible (cut to the necessary length).

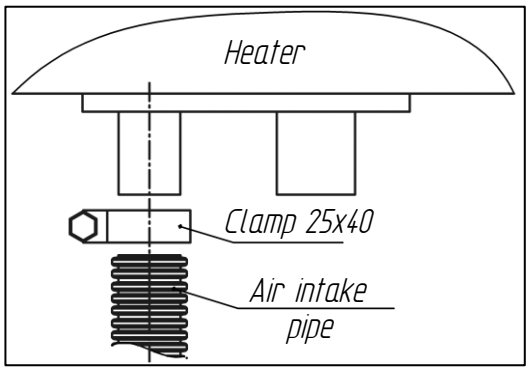

Fig. 4 – Connection of the air pipe to the heater

It is forbidden to use the heater without an air intake pipe.

The air intake pipe is connected directly to the pipe of the heater and fastened with a clamp. (Fig.4).

When laying the air intake pipe, avoid sharp bends and do not obstruct the opening of the air intake pipe with foreign objects. Make sure its opening is pointing downwards (see Fig. 5). If that is not possible Ø3mm hole needs to be drilled at the lowest point of the pipe.

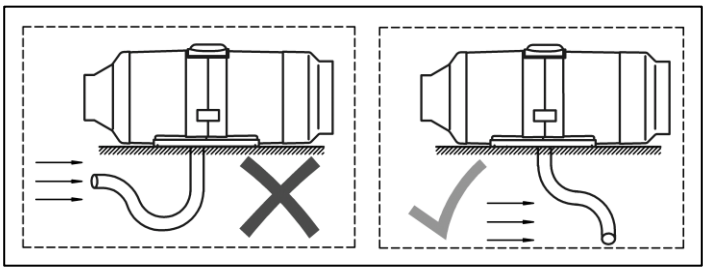

Fig. 5 – Position of air intake/exhaust pipe

The correct installation of the exhaust and air intake pipes is when they are on the same side (Fig.6a/b). The distance between them should exclude re-suction of exhaust gases through the air intake (at least 20 cm).

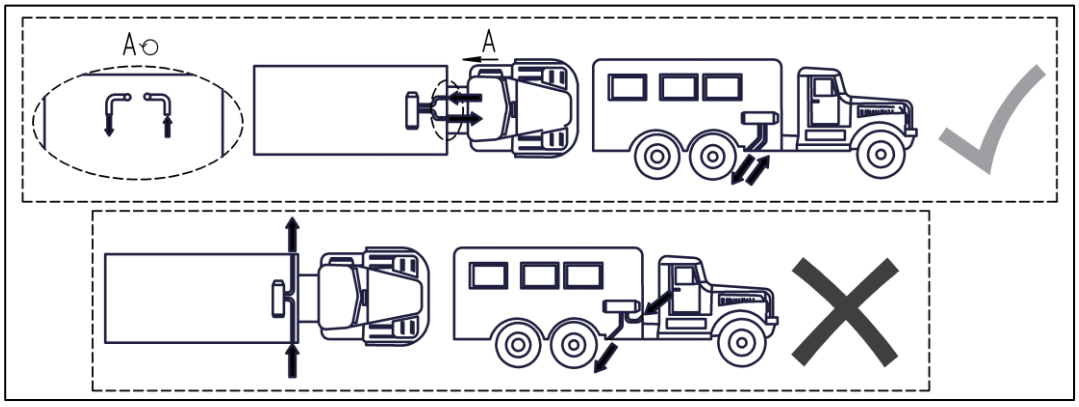

Fig. 6a - Location of intake and exhaust pipes on land vehicles

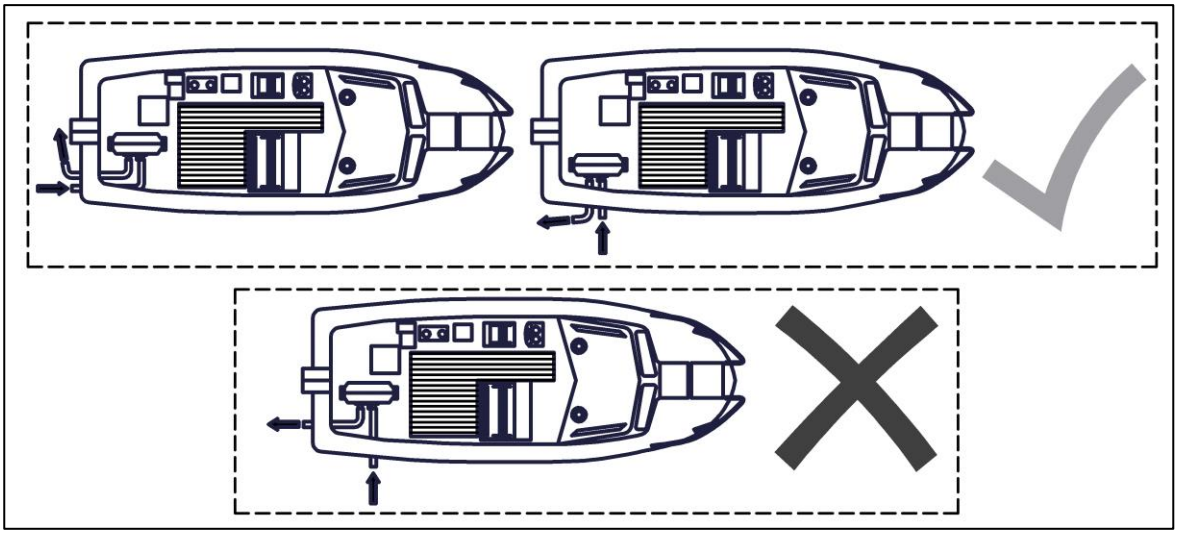

Fig. 6b - Location of intake and exhaust pipes on maritime transport

Disregard of this recommendation can lead to the opposite movement of the flame towards the air pump fan, to melting of air pump fan and to burning of a heater.

Air intake must not be installed in the movement direction of the vehicle/vessel.

In cases when intake of clean air cannot be ensured, such as off-road and special purpose vehicles, please mount the dedicated AUTOTERM air filter (assy.2684)

3.2.1 Installation of the air intake pipe on maritime transport

➔ *Air intake from well-ventilated areas*

Ambient pressure and sufficient ventilation using outside air must be present in the air intake zone. Increased or reduced pressure in the air intake zones is not allowed. It is recommended to attach the air duct all along its length to the hull of the vessel using plastic clamps, when possible. Put a cap on the end of the air duct to protect it from drawing in foreign objects.

➔ *Air intake from outside of the vessel.*

An air intake pipe (Fig.7) should be used to take the air from outside Make an opening Ø26^{+1} mm in the board of the vessel to install it. Install a rubber gasket between the flange of the air intake pipe and the hull of the vessel. Attach the air duct using three bolts as shown on Fig.7. Attach the air duct to the air intake pipe using the clamp. It is recommended to attach the air duct all along its length to elements of the hull of the vessel using plastic tie straps, when possible. Make a 3mm opening in the bottom point of the air duct to drain condensate or any water, which has penetrated the air intake pipe.

Do not place the intake opening of the air intake pipe in front of the incoming air flow of the moving vessel

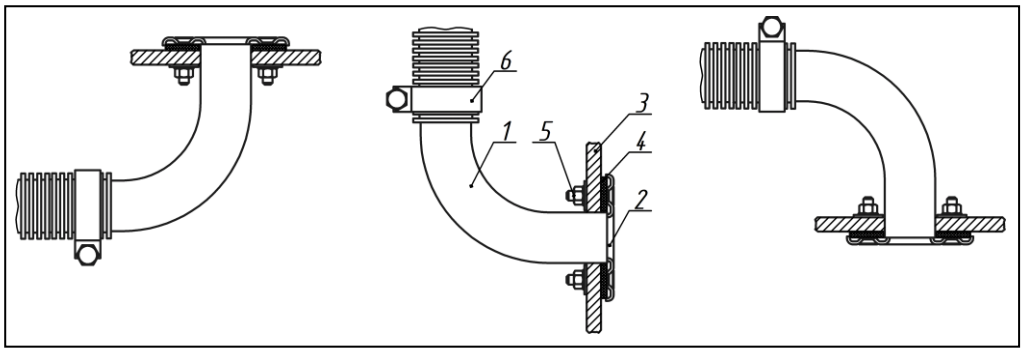

Fig. 7 - Installation of the air intake pipe

1 – Air intake pipe;
2 – Flange of the air intake pipe;
3 – Hull of the vessel;
4 – Gasket;
5 – Fastener assembly;
6 – Clamp.

3.3 Installation of the exhaust pipe.

When installing the exhaust pipe, take into consideration high temperature (up to 500°C) of the exhaust pipe when heater is in operation. Cut the exhaust pipe (flexible crinkled metal hose, maximum length – 2 meters) to the necessary length. It is advised to use two-layer exhaust pipe when installing the heater. Attach the exhaust pipe (Fig.8) using clamps and install it so that it is slightly inclined to the bottom in the direction of exhaust. Install heat insulation on the exhaust pipe to protect individual sections of the vessel (wiring or other heat-sensitive objects).

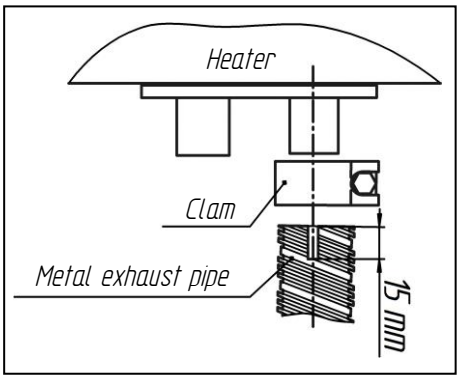

Fig. 8 - Attachment of the metal pipe to the heater

Install the exhaust pipe to avoid the possibility of repeated intake of exhaust gases by the air intake pipe, and make sure that no exhaust gases enter the interior or are drawn in by the fan through the cab heater radiator.

At the end of the exhaust pipe a shield is installed, which necessary for stable operation at low heating modes (Fig.9).

In absence of the shield, air will be blown back into the exhaust pipe. This leads to increased heater shooting and impairs heat capacity. Exhaust gases must be removed outside of the vehicle

Heater is provided with airtight exhaust silencer. This mean it can be mounted in small vessels and confined spaces. But for mounting exhaust silencer on the outside of the vehicle, Ø5mm hole needs to be drilled at the bottom of the silencer (see Fig. 10a).

If desired mounting situation requires the exhaust silencer to be mounted vertically, condensate drain hole must be drilled, like shown in Fig. 10b, to avoid condensate build up in exhaust silencer. If that is not possible, it is recommended to install it sideways (see Fig.10a).

The outlet of the exhaust pipe must be installed **pointing downwards (Fig. 5)**, but it should be in such a position that would prevent clogging or entering of snow and dirt, and also provide for free drain of any water that got into it.

Installing on maritime transport, silencer must be mounted using the bolt and a nut provided, so it would be in fixated position.

Make longitudinal cuts (about 15mm) (see Fig. 8, Fig. 9 Fig.11) on ends of the metal hose to ensure better sealing when connecting the heater pipe to the pipe for discharge of exhaust gases through the board of the vessel, but without going beyond the pipe to be covered.

Rubber bushing (sold seperatly) must be used if exhaust pipe goes through plastic parts, for example, bumper of a vehicle (see Fig. 11).

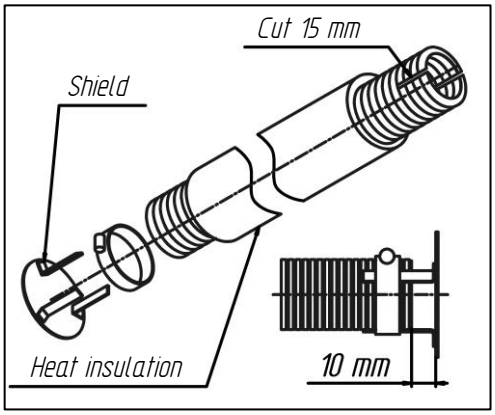

Fig. 9 – Exhaust pipe shield

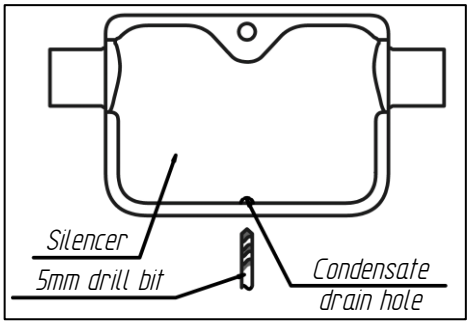

Fig. 10a – Condensate drain hole for horizontal mounting

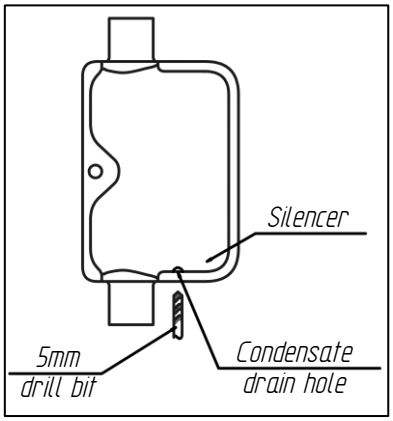

Fig. 10b – Condensate drain hole for vertical mounting

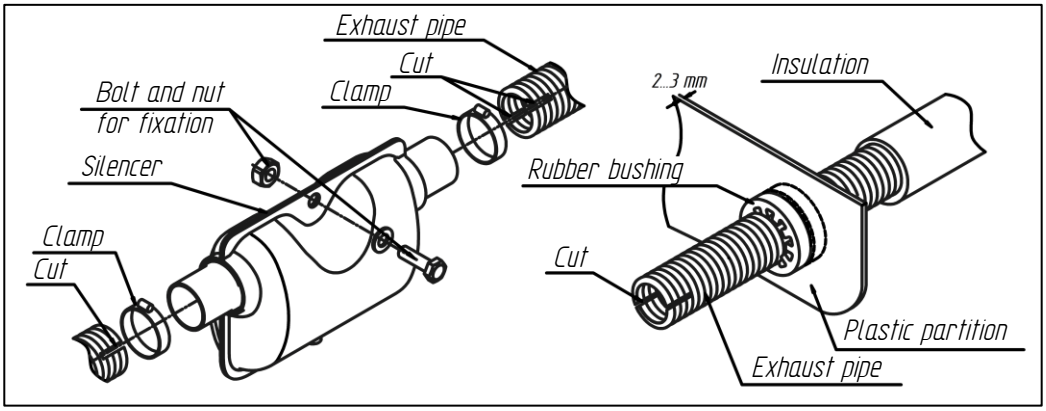

Fig. 11 - Attachment of the exhaust pipe to the heater and usage of rubber bushing

The exhaust pipe needs additional insulation at every connection of the metal hose, for example, using a heat resistant tape or sealant, to prevent any leaks of exhaust gases at connection points.

Additional heat insulation must be installed at places where the exhaust pipe goes through the floor or the side wall of the vehicle (Fig. 12) to avoid unnecessary fire hazard.

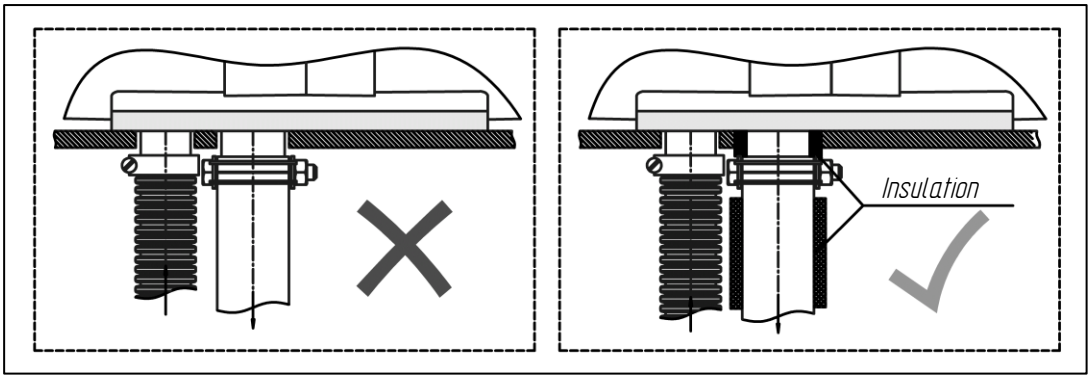

Fig. 12 – Installation of additional heat insulation

The end of the metal hose should not contact the rubber seal of the heater. It is advised to install the discharge of exhaust gases in a way, that does not allow exhaust gases to flow inside the spaces used by people, like drivers' cabin or living quarters of maritime transport (e.g. away from open windows, doors), to avoid the possibility of inhaling dangerous exhaust gases.

Do not place the output opening of the exhaust pipe in front of the incoming airflow of the moving vehicle or vessel (see Fig. 5).

3.3.1. Installing exhaust adapter on maritime transport

Exhaust gases are discharged overboard the vessel. Install the discharge of exhaust gases in a location inaccessible to water (at least 60 cm above the waterline) and to avoid the possibility of repeated intake of exhaust gases by the air intake pipe.

To install the exhaust pipe adapter (hull fitting), drill a hole in the hull of the vessel at least 5 mm larger in diameter than actual outer diameter of the hull fitting. Install the exhaust pipe into it as per Fig.13 with the pipe looking upwards (to avoid penetration of water). Install a rubber gasket between the flange of the exhaust pipe and the hull of the vessel to seal the connection.

To prevent exhaust gas leaks or falling off of the exhaust pipes, it is advised to use an exhaust cement or different kind of sealant on every connection of the exhaust pipe Sailboats should not install the exhaust adapter on the side of the hull, only at the stern.

1 - Exhaust pipe adapter;
2 - Flange of the exhaust pipe;
3 - Gasket;
4 - Hull of the vessel;
5 - Fasteners;
6 - Clamp;
7 - Metal hose.

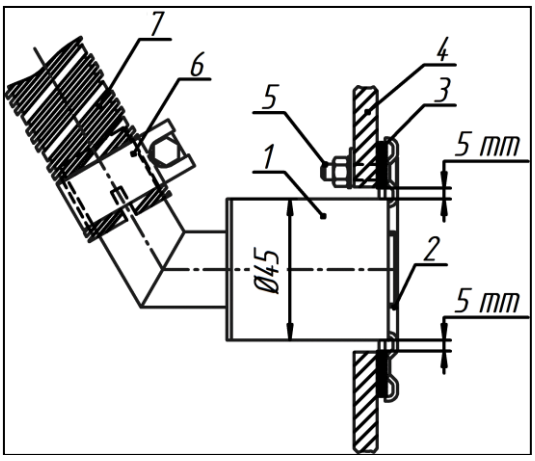

Fig. 13 - Installation of the exhaust pipe

3.4 Installation of the fuel system.

Do not operate the heater using biofuel.
Use only diesel fuel standard EN590, depending on the ambient temperature.

Act as instructed on Fig.14 and Fig.17 to install the fuel system. The fuel pump and the fuel supply line must be protected from heating.

It is recommended to install a small inline fuel filter before the fuel pump. Make sure that the filter is completely filled with fuel. Also make sure that you're using fuel lines of the same diameter as provided with the heater.

Do not take fuel from fuel filter or it's casings, because doing so causes a leak of fuel.

Do not take fuel from the fuel line between the fuel filter and fuel pump of the vehicle's engine, the return line of the engine or after the high-pressure pump of the vehicle.
Heater is not designed to work with such high pressure.

Fuel line system should be as short as possible. Recommended maximum length of the fuel line is 5m. Distance between fuel tank and fuel pump should not exceed 1m and distance between fuel pump and the heater should not exceed 4m (see Fig.14 and Fig.17)

3.4.1 Fuel suction using a fuel suction hose.

Before installing a fuel suction hose in a fuel tank of the vehicle or vessel, make sure that the fuel level is high enough to ensure operation of the heater, and low enough to easily remove the fuel tank, if needed.

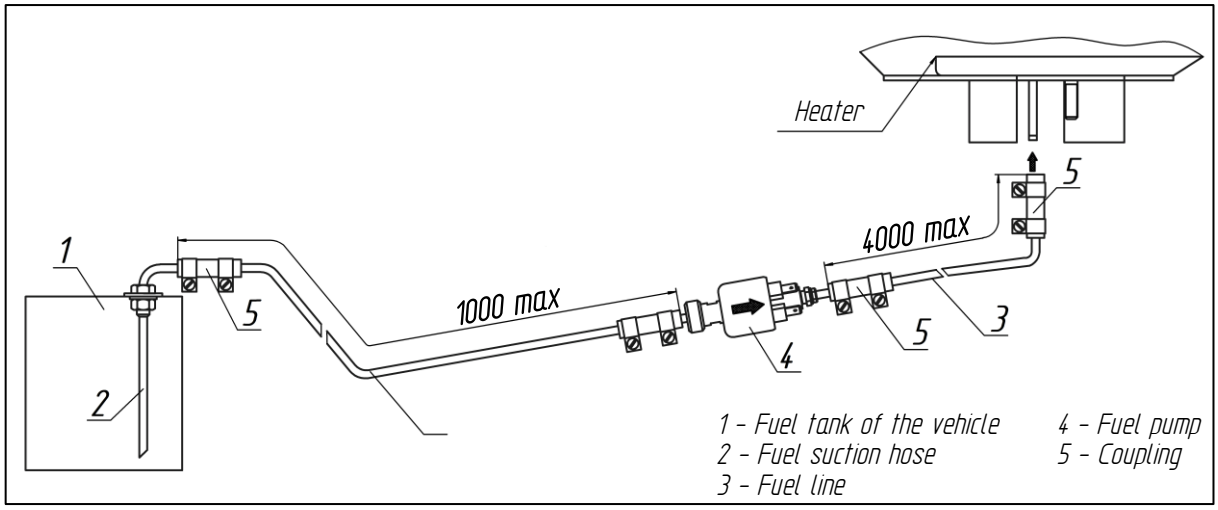

Fig. 14 - Example of fuel supply to the heater with fuel suction hose

Fuel is taken directly from the fuel tank of the vehicle or vessel or an additional tank. Drill a hole Ø16mm in the fuel tank to install a fuel suction hose. When drilling the hole in the fuel tank, follow safety precautions that should be observed when working with a transport, which is filled with fuel or explosive substance.

If needed, cut the immersible tube of the fuel suction hose shorter before installation. Its bottom end must be located about 10-15 mm above the bottom of the tank, or at the height to provide fuel for engine in the fuel tank at any time. The cut at the end of the fuel suction hose must be made at a 45° angle to the axis of the tube. Remove all burrs from the cut after the work is done.

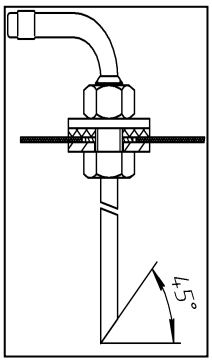

Fig. 15a – Installation of the fuel suction hose

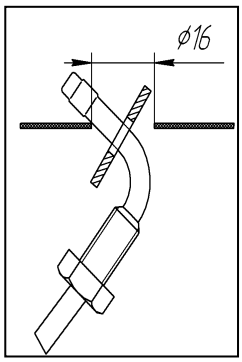

Fig. 15b – Installation of the washer.

Install the fuel suction hose in the fuel tank as per Fig.15a. Install the special washer of the fuel suction hose in the tank hole as per Fig.15b. Apply a fuel-proof sealant on the threaded surface of the fuel suction tank to properly seal the connection between the fuel suction hose and the fuel tank.

Never install the suction hose on the side of the fuel tank. It must be installed on the top side of the fuel tank.

3.4.2 Fuel suction from an additional fuel tank

Consider convenience of fuelling, when installing the fuel tank (Fig.16). Install the fuel tank in such a way that the amount of fuel and its potential leaks from the inlet, fuel suction nozzle or connections can be visually controlled.

When filling the fuel tank, be careful not to spill any of the fuel on the exhaust system, wiring or other objects, which can be damaged due to their contact with fuel.

Fuel tank must be installed with its wide side perpendicular to the direction of the movement of the vehicle/vessel (see Fig. 16).

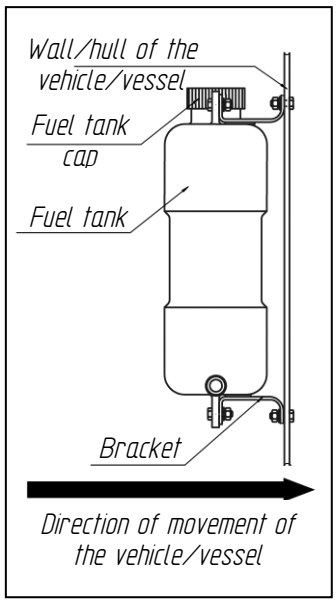

Fig. 16 Installation of the fuel tank

3.4.3 – Fuel suction from the fuel tank of the vehicle.

Fuel is taken from a fuel line of the vehicle using a T-piece (see Fig.17). This method can be used if there is no pressure in the fuel line. If vehicle is equipped with a low-pressure fuel pump in the fuel tank, then those fuel lines cannot be used, fuel suction hose must be installed instead. **Mind the installation position of the T-piece.**

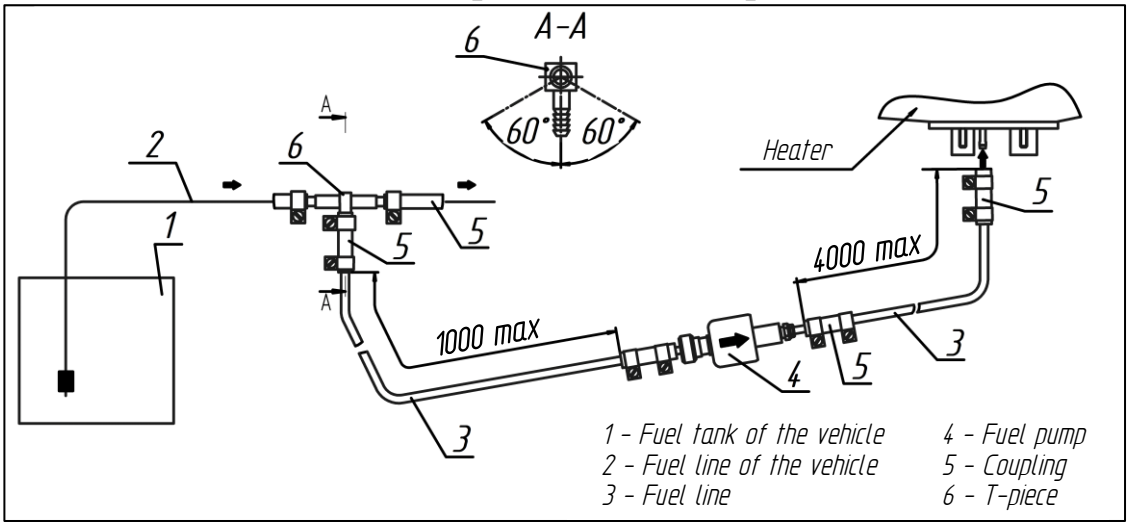

Fig. 17 – Fuel suction using a T-piece

3.4.4 Installation of the fuel pump and the fuel supply line.

The fuel pump is connected to the heater through its own harness and supplies fuel depending on the required heat capacity to the combustion chamber of the heater. The fuel pump is operated by electrical impulses sent by the control unit. When running, the fuel pump makes characteristic metallic clicking noise.

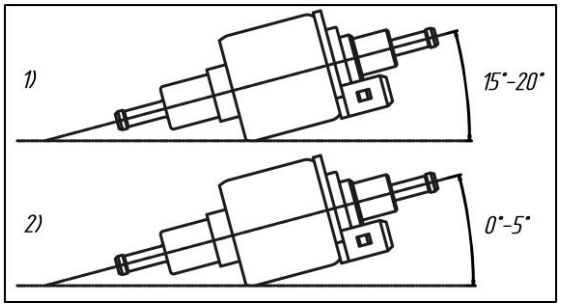

Fig. 18 – Installation angle of Advers fuel pump (1) and Thomas Magnete (2) fuel pump.

It is recommended to install the fuel pump close to the fuel tank (distance should not exceed 1 meter (see Fig.14 and Fig.17)) and below the low level of fuel in the fuel tank, but not lower than 70cm of the minimal fuel level (see Fig.19, point *a)*). But the distance between the fuel pump and the heater cannot be greater than 1,5 meters (see Fig.19, point *b)*). Fuel pump should be positioned with a slight angle pointing upwards (see Fig.18)

If for some reason sealing of the fuel pump is compromised, it is advised to install the fuel pump lower than the heater in order to avoid leaks and overflooding the heater with fuel due to gravity.

Remember to properly bleed the “silent” TH11 fuel pump. If it’s not properly bled it will be as loud as standard fuel pump.

To bleed it start the heater and position the fuel pump with its outlet upwards till there are no air bubbles in the fuel line and only then secure fuel pump in its recommended position.

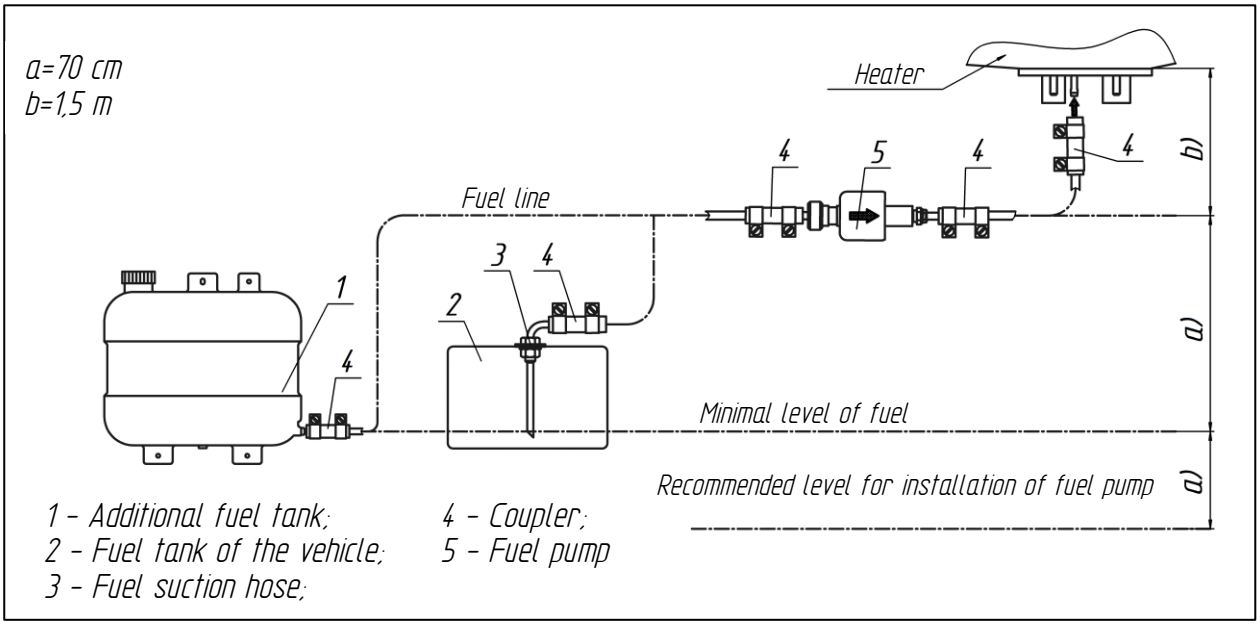

Fig. 19 – Height position of the fuel pump in the fuel system

Attach the fuel pump to the flexible rubber clamp (supplied with the heater), which reduces the transfer of noise to the frame of vehicle or hull of the vessel. (see Fig. 20)

Act as instructed on Fig.14 and Fig.17 to install the fuel supply lines. Use clamps to attach fuel supply lines. Do not tighten the clamps too much trying to avoid leaks because clamps break easily if tightened with too much force.

It is preferable to lay the fuel supply line on a straight line and with a small inclination upwards in the direction of the heater. The fuel supply line should be fastened at equal distances to prevent sagging, prevent effects of vibrations and avoid fractures. Do not allow contact of the fuel pump and the fuel supply line with hot objects. Cut the fuel supply line only using a sharp knife as per Fig.21. At the locations of cuts, there should be no narrowing of the flow cross-section of the fuel line, dents or kinks.

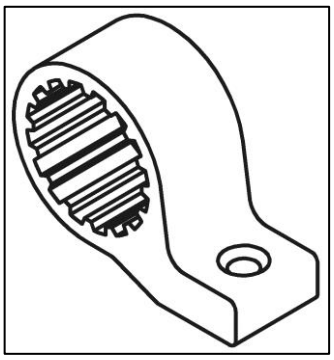

Fig. 20 - Flexible rubber clamp

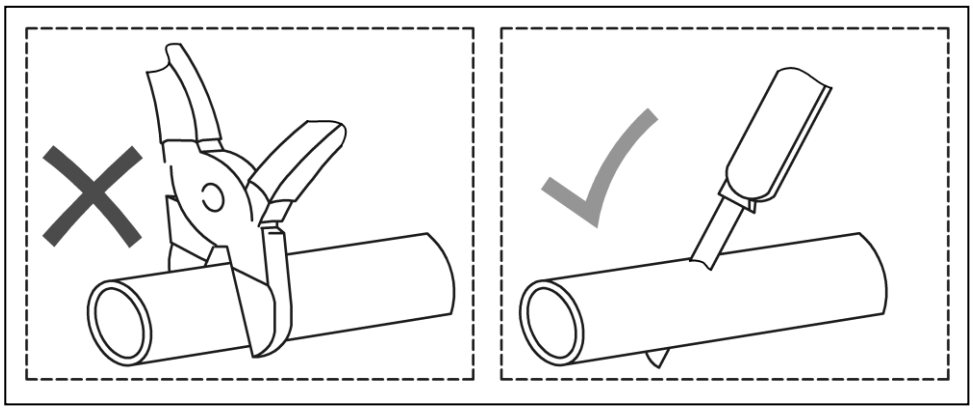

Fig. 21 - Cutting of the line before installation.

3.4.5 Installation of the electrical harness of the fuel pump.

If the length of the wiring harness of the fuel pump needs to be shortened, it is allowed to remove the unnecessary portion from the middle of the harness. The connection point must be insulated.

Never connect the fuel pump to continuous DC power supply. It will burn the coil of the fuel pump.

Installation of the connector of the electrical harness of the fuel pump is shown in Fig.22.

Make sure that the wiring of the fuel pump is installed in desired way before inserting the pins of the wiring in the plastic casing.

Make sure that the pins are inserted all the way to the end and lock securely in the plastic casing. When it's correctly inserted, a small click can be felt. The polarity of the pins does not matter.

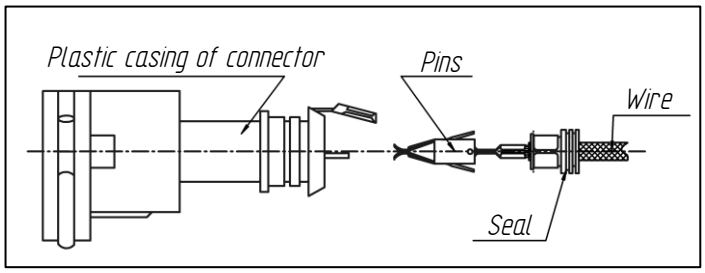

Fig. 22 - Installation of the connector of the electrical harness of the fuel pump

3.5 Installation of wiring of the heater.

Install electric harnesses of the heater according to the diagram of electrical connections of the heater (see Annex.4).

When installing electrical harnesses exclude the possibility of them being heated. Install all the wire harnesses and electrical elements in dry and protected places. No deformation or moving of wires is permissible, when the vehicle or vessel is operated.

IMPORTANT!

Fuses must be removed before installing electrical harnesses.

Battery of the vehicle or an auxiliary battery powers the heater. Control the charge of the battery on a regular basis. It is recommended to disconnect the heater from the battery to avoid its discharge during long dockage or storage of the vessel or vehicle. **Do not disconnect the heater from power before the purge cycle ends.**

Heater must be connected to uninterrupted power supply at all times. Cutting the power to the heater will result in loss of settings (clock, operation mode and settings).

If the heater is connected to an existing electrical installation, the wiring should be in sufficient diameter to prevent voltage drop (main cause of error 15). It is always recommended to connect the heater directly to the battery of the vehicle/vessel or auxiliary battery. It is strongly recommended to use new and provided wiring for installation of the heater.

3.6 Installation of the temperature sensor (optional).

The temperature sensor (Fig.23) measures air temperature in the area of its installation and allows running the heater in a set temperature mode. Install the sensor in a convenient (appropriate) place in the heated room.

The operation of the heater with a temperature sensor is described in the operation manual of the control panel.

The maximum length of the sensor harness is 5 meters. Temperature regulation depends on the location of the sensor.

Follow these recommendations, when installing the temperature sensor:

Install the sensor:

- ✓ in the largest heated cabin;
- ✓ in the middle position of temperature distribution in the cabin;
- ✓ on a vertical internal wall of the cabin, if possible;
- ✓ at a distance from sources of heat.

Do not install the sensor:

- ⦸ close to the deflector, to avoid the effect of the flow of warm air;
- ⦸ near the gangway;
- ⦸ behind cushions or curtains or other accessories;
- ⦸ in a direct sunlight;
- ⦸ close to the ceiling.

When the temperature sensor has been installed, lay the line up to the heater location. Connect the shoe of the temperature sensor to the corresponding connector on the heater.

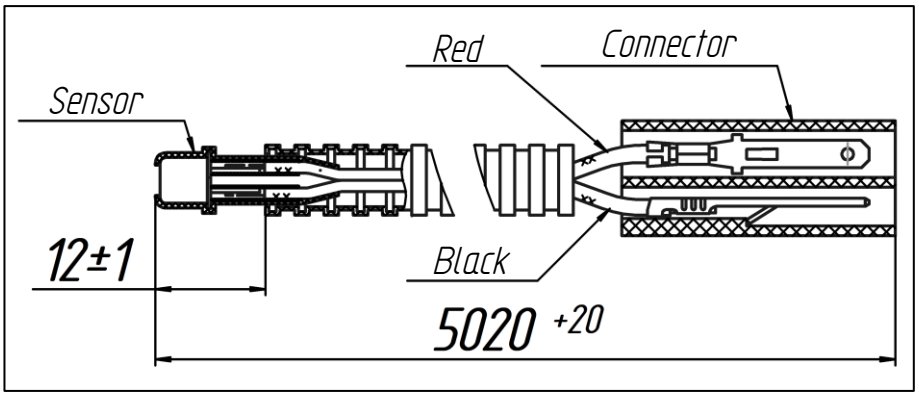

Fig. 23 – Temperature sensor

3.7 Installation of the control panel.

The control panel is intended for control of operation of the heater. Install the panel in a convenient (appropriate) place protected from water. The panel is attached using double-sided adhesive tape or a standard bracket (Fig.24). The wire may be brought out of the panel casing through the back cover or the partition of the inner surface of the panel casing. Before installation degrease the surface, where the panel is to be installed. Remove protective film from adhesive tape and install the panel on the prepared surface.

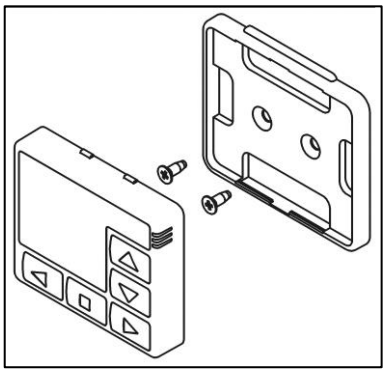

Fig. 24 – Installation of the control panel PU-27 using a mounting bracket.

Never extend the cable of the control panel itself. It's transmitting a digital signal. In the event of a bad connection, this will result in malfunctions. If the provided cable is too short, it is recommended to purchase an extension cable from a local dealer.

4 Testing of the heater after installation and first launch

The heater can be put in operation only when the system has been fully installed! After installation, check:

- tightening of clamps;
- voltage of the battery;
- reliability of attachment of electric contacts of harnesses and assemblies of the heater.

Fill the fuel main line with fuel, preferably using a fuel-priming device, which can be ordered from official dealers. When the fuel system is filled, check that the fuel supply line is sealed.

Start the heater and check its operation in minimum and maximum modes. Check tightness and sealing of all connections of air ducts and fuel supply lines.

Run the heater in maximum mode for about 2 hours.

During the first launch, the exhaust pipe might emit some smoke for a short period of time.

The launch process of the heater starts with under a minute-long power-on-self-test. At that time heater self-checks its components for errors. During this phase all components are powered up once, which results in a single audible pump click, a short fan burst and internal checks of glow plug and sensors. After that it starts a phase of heating the glow plug to remove any fuel vapours remaining from the previous cycle of work, which is up to 120 seconds long, and does not make any sounds. Be patient.

After the purge ends, starts the process of ignition and continuation of the set mode, which means that the fan will slowly start to rotate and fuel pump start to click.

Before starting the desired working mode and power/temperature setting, the heater will power up to 100% to heat up the combustion chamber and to ensure proper burning temperatures.
Depending on ambient temperature and model of the heater, this process can take up to 15 minutes.

Hot air is produced only after heating up the heat exchanger. This process takes up to 3-5 minutes depending on ambient temperature and model of the heater.
IT DOES NOT HAPPEN INSTANTLY.

Stop the heater. When the heater is stopped, the fuel supply stops, and the combustion chamber and the heat exchanger are vented to reduce temperature.

After first launch, please test the heater with a running engine of vehicle/vessel to check possible fuel and/or power supply problems.

During the first few hours of operation, heater can emit an unpleasant smell. To get rid of the smell, run the heater for several hours on maximum power. Ensure good ventilation of the place of installation.

The insulation of exhaust pipe has to burn-in. That also causes an unpleasant smell.

4.1 Automatic Control Features

1) if for some reason the heater did not start, the start-up process will be automatically repeated. After two failed attempts the heater will be switched off;
2) if during the heater's operation burning is interrupted, the heater automatically re-starts. Restarts after consecutive flameouts are performed up to three times;
3) in case of overheating of the heater coil (for example, due to blocked intake or output of the heating unit), the heater is automatically switched off;
4) if the maximum temperature of the heated air is exceeded (for example, due to closed outlet of the heating unit), the heater is automatically switched off;
5) if voltage drops below 20V (10V) or increases to more than 30V (16V), the heater automatically switches off. The numbers in parentheses are for the heaters with the nominal voltage of 12V;
6) if the heater switches off due to an emergency situation, a malfunction code appears on the control panel. The malfunction code and the LED indicating the operation mode will be blinking.
7) in case one of the temperature sensors is faulty, the heater will not launch and a malfunction code will appear on the control panel.

5 Installation of air ducts.

The air for heating must be taken from clean space protected from rain, splashes, dirt, water and **without exhaust gases.** Never draw air from the engine compartment.

Fresh air from outside or recirculated air from rooms can be taken for heating.

- Intake of fresh air.

The air is taken from outside, heated and supplied to inner rooms. This operation renews air in heated spaces and lowers humidity. Note locations of outlet vents in cabins and make sure that their number is sufficient.

Installing the heater on a maritime transport avoid ingress of overboard or rain water into the inner space of the heater.

Air intake from outside can lead to loss of heating capacity, increase of fuel and electrical power consumption. **For safety reasons it is not recommended**, because of high risk of drawing exhaust gases (yours or other vehicles') in to the living spaces.

- Air intake from inner rooms.

In this case, heated air is taken from inner rooms. The advantage of such option is fast heating due to better use of heat. However, this operation does not lower humidity, and the air in the heated spaces is not renewed.

Use only thermally stable air ducts, designed for operation temperature up to 130°C, to lay channels for heater air!
Heat insulation is necessary to reduce heat losses, when laying air ducts through the rooms or spaces that do not need heating, for example when installing ducts over or nearby batteries.

WARNING!!!
Do not connect air lines to AIR-8D air heaters because it can cause overheating of the heater.

Additional air duct components can be added to the heater for distributing hot air (Fig. 26a/b/c). Each of the components reduces total flow rate of hot air (Fig. 25). In order for you to be sure that the option you have selected for the installation of air ducts, is acceptable and will not result in a massive flow rate reduction of hot air or overheating of the heater you have to consider the distribution of the air with different components.

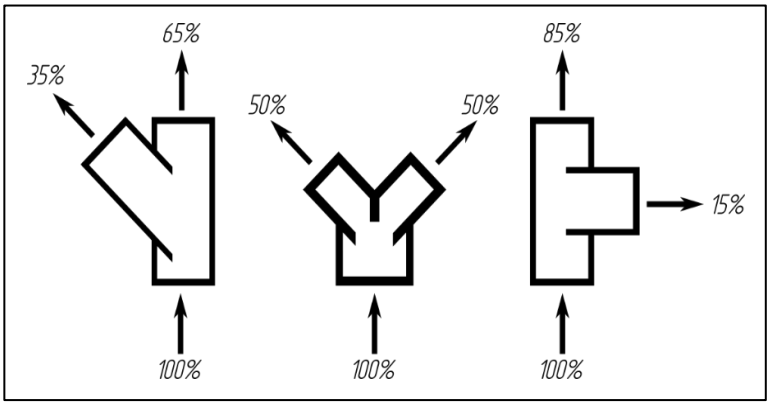

Fig. 25 – Examples of air distribution with different components

Air duct system should be kept as simple as possible. Complicated systems lead to heat loss.

Diameter of air duct depends on the model of the heater. Air duct system always must start with the designated diameter for the type of the heater, after that diameter can be reduced using different adapters (see Fig. 6b/c). Using smaller diameters than designated as a start of the system, can cause heater to overheat. First meter of the air duct must be as straight as possible.

Heater	Size of duct
AIR-2D 12/24V	ø60 mm
AIR-4D 12/24V	ø90 mm
AIR-9D 12/24V	ø100mm

Table 1 – Minimal size of the ducts depending on the model of the heater

When using double channel air ducts, one channel should end with a non-closable air outlet.

The heater is supplied with inlet and outlet grilles already installed. In such a case, the heater can be used for heating of the room/cabin, in which it is installed. If several rooms/cabins need to be heated, lay air ducts along the perimeter of the vessel. Replace the inlet and/or outlet grille on the heater to connect the air duct to it (only for AIR-2D and AIR-4D). Use a flat screwdriver to disengage hitches on the heater casing and remove the grille. Install an adapter (only for AIR-4D) and attach the air duct to it with a clamp. Use different shape adapters and connectors for distribution of warm air (it is recommended to use Y-shaped adapters to reduce resistance and increase effectiveness, if possible). Install deflectors on ends of air ducts (Fig.6a for AIR-2D, and Fig.6b for AIR-4D).

When installing an air duct at the air inlet the noise level will rise. It is recommended to install a silencer.

Do not deform channels with heated air. This may add additional resistance to the flow of warm air and reduce efficiency of heating.

Install air ducts without excessive bends or narrowed sections. The cross-section area of the air duct must not be less than the outlet of the heater.

When distributing supply of hot air, one of deflectors MUST be of a non-closable type to avoid overheating of the heater.

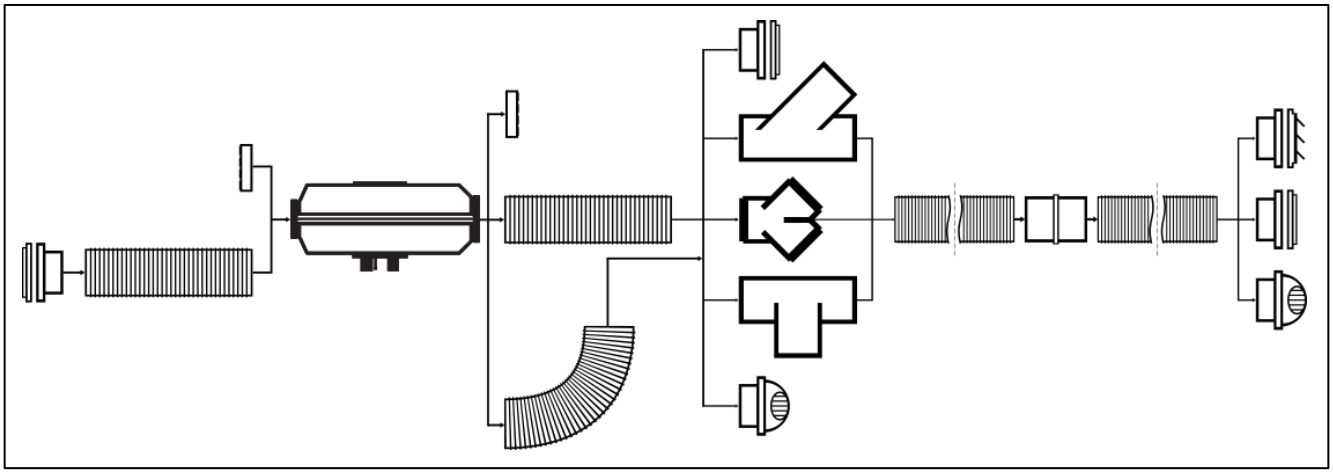

Fig. 26a – Air duct connections for AIR-2D (60mm)

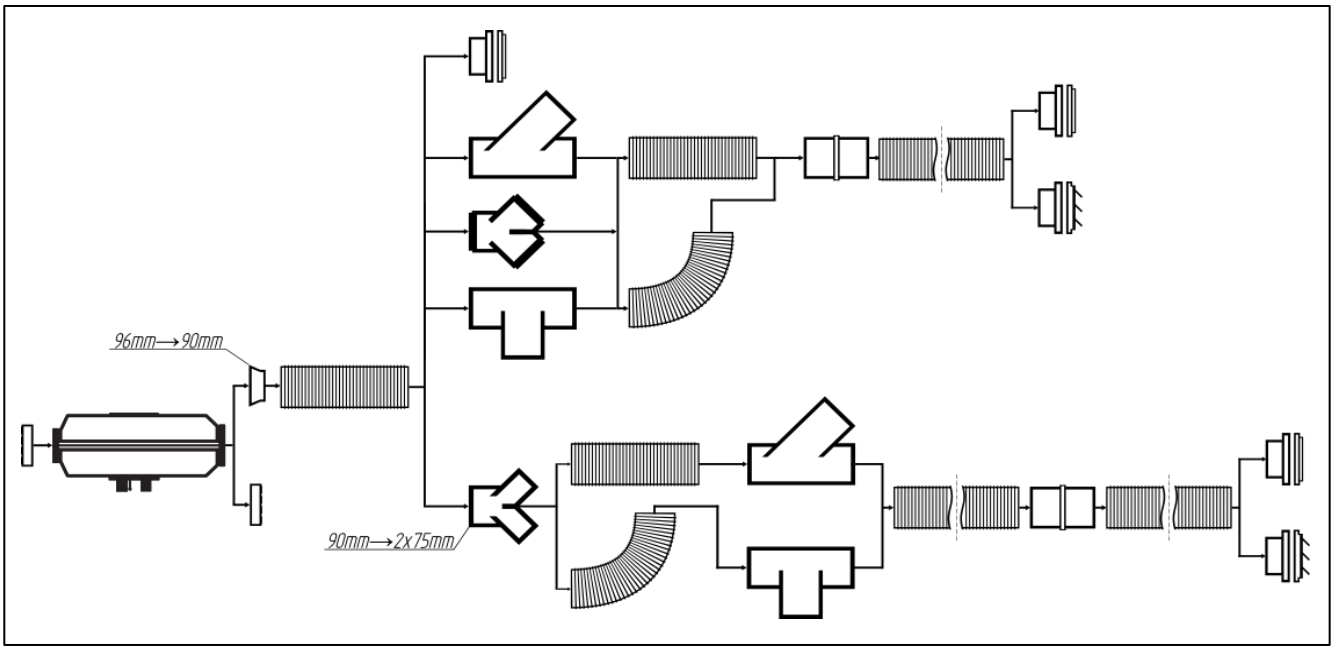

Fig. 26b – Air duct connections for AIR-4D (90mm/75mm)

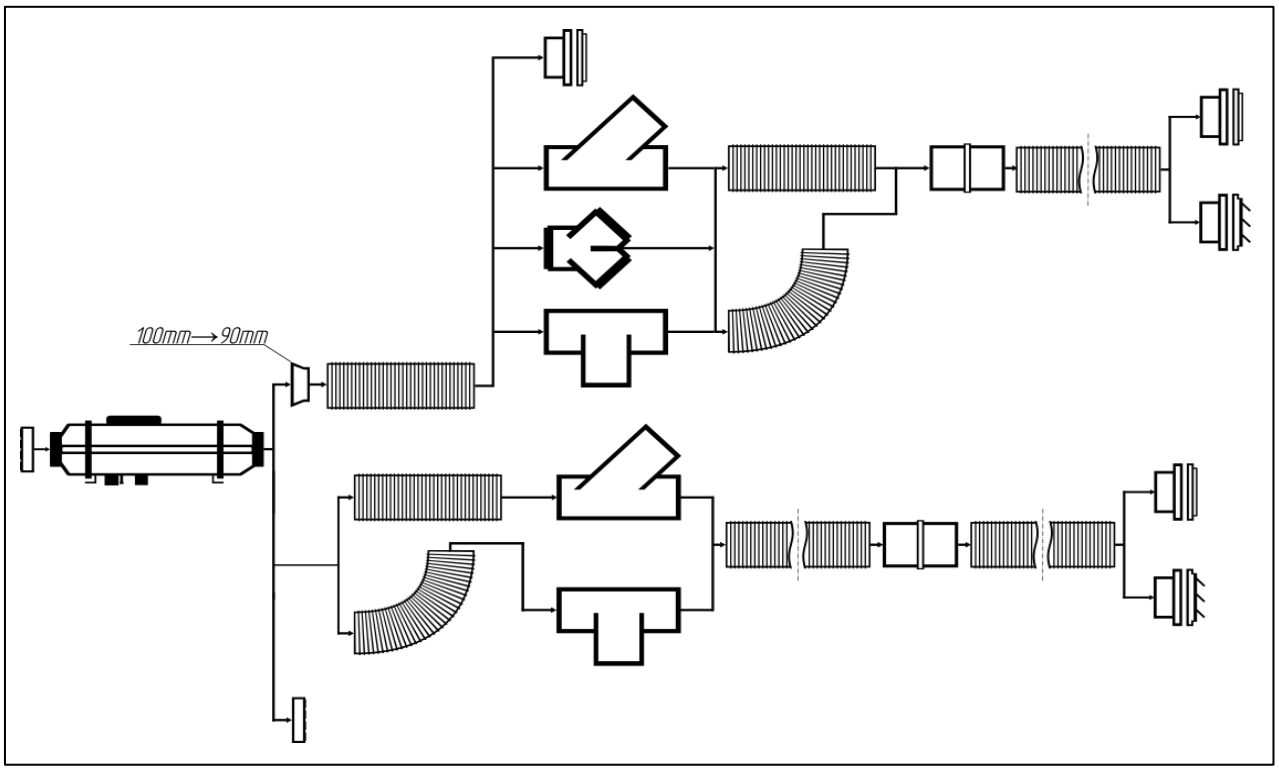

Fig. 26c – Air duct connections for AIR- 9D (100mm/90mm)

6 Recommendations.

If the heater does not start after switching on, make sure there is fuel in the tank, check the charge of the battery, check if connectors are properly connected and if the 25A fuses are good.

If you were unable to find the root cause of the fault, contact your nearest dealer or service centre, or the website www.autoterm-europe.com.

WARNING!

	1 When starting the heater for the first time after installation, it is preferable to fill the main fuel line up to the input nozzle of the heater using a priming device. If there is no priming device, start the heater several times until the main fuel line is filled.
	2 Important to remember that if the heater has not started after activation, the control unit will restart the heater in automatic mode. If the heater does not start after two attempts, a fault code will be displayed on the control panel. (Look for fault codes table in "*Section 7 – Malfunctions*" in this manual)
	3 The cabin temperature sensor must be disabled (if it is installed), if you need to start the heater at a temperature above 30°C. Operation with a temperature sensor is described in the operation manual.

For the correct operation, the heater needs regular (annual) maintenance. Stop the heater and let all system parts cool down before any works:

- check for corrosion on electrical plugs and contacts (with battery disconnected);
- check sealing of fuel hoses;
- check sealing and corrosion in the system of exhaust gases;
- check whether air intake pipes and air ducts are clean;
- check air ducts for damages;
- run a computer diagnostic of the heater.

To ensure reliable operation of the heater, switch it on once a month for 20 minutes on full power, including the warm seasons of the year, when the heater is out of operation. This action is necessary to remove any viscous film sediments on moving parts of the fuel pump. Failure to do so may lead to premature failure of the heater.

If separate fuel tank is used, fuel in the system has to be changed at least once a season. Before the start of the heating season, check the fuel tank. If the tank stored fuel for a long time (for example from the past heating season), it is necessary to drain it! Rinse the tank with gasoline or kerosene and fill it with fresh diesel fuel. This procedure is designed to remove sediment formed in the fuel during prolonged storage. Failure to follow this procedure can lead to clogging or failure of the fuel pump and increased sooting in the combustion chamber.

In case of a long parking or storing the vessel or vehicle, disconnect the heater from the power source (battery) to prevent it from discharging (current consumption of the heater out of service is (30 ÷ 40) mA).

7 Malfunctions.

Fault code	PU-5 blinks	Description	Fault Cause	Recommended Solutions
01	**1**	Overheating of the heat exchanger	The sensor sends a signal to shut down the heater. Heat exchanger temperature in the sensor zone is over 250°C	Check the intake and outlet of the heating unit for unobstructed entry and exit of heated air. Check the integrity of the fan and its performance. Check the temperature sensor and replace it if necessary. Inspect the heat exchanger. Check and remove carbon deposits from the inside of the
02	**12**	Possible overheating at the intake temperature sensor. Sensor temperature (control unit) is more than 55 degrees.	Control unit is insufficiently cooled down during 5 min. purging before start-up; or overheating of the control unit during operation.	Check the intake and outlet of the heating unit for unobstructed entry and exit of air and re-start the heater to cool it down. Replace the control unit.
05	**5**	Faulty temperature sensor (AIR-2D) or flame indicator	Short circuit to the casing or open circuit in the wiring of the sensor.	Check sensor, replace if necessary
04 / 06	**6**	Faulty temperature sensor in the control unit	Temperature sensor out of order (located in the control unit, cannot be replaced)	Replace control unit
07		Overheat sensor - open circuit	Faulty sensor. Oxidation of contacts in the terminal block.	Check overheat sensor circuit for an open. Remove oxidation from the connector contacts.
08				See Fault Code 29.
09	**4**	Faulty glow plug	Short circuit, open circuit, faulty control unit.	Check glow plug, replace if necessary. Check the control unit, replace if necessary.
10	**11**	Electric motor of the air blower does not develop the necessary speed.	Increased friction in the bearings or contact between the impeller and fan shroud in the blower. Faulty electric motor.	Check electric motor, if possible correct the fault; replace air blower if necessary
11		Faulty air temperature sensor (intake) only for AIR-8D.	Mechanical fault. Oxidation of contacts in the block.	Check connecting wires.
12	**9**	Shut down, overvoltage more than	Faulty voltage regulator. Faulty battery.	Check battery terminals and wiring. Check the battery, charge it or replace if necessary.
15		Shut down, low voltage, less than 20V		
13	**2**	The heater does not start - two automatic start attempts failed.	No fuel in the tank	Fill the fuel tank.
			Fuel grade does not match the operating conditions at low temperatures.	Replace fuel, see Annex 1.
			Insufficient supply of fuel.	Eliminate fuel line leakage or blockage. Check the performance of the fuel pump, replace if necessary
			Clogged exhaust duct or combustion air intake.	Clean air intake or exhaust duct of possible clogging.
			Insufficient pre-heating of the glow plug, faulty control unit.	Check the plug, replace if necessary. Check voltage supplied by control unit, replace if necessary.
			The impeller touches the the fan shroud in the blower, and, as a result, flow of air into the combustion chamber is reduced.	Replace blower after determining its malfunction.
			The glow plug housing in CC is clogged. Clogged glow plug screen or it is not installed all the way into housing.	Clean the glow plug hole. Replace the glow plug screen, if needed, and install it in accordance with repair manual

Fault code	PU-5 blinks	Description	Fault Cause	Recommended Solutions
16	**10**	During the purge time, temperature sensor was not cooled down. Time for ventilation was exceeded.	During 5 min purge before start-up, temperature sensor was not sufficiently cooled.	Check the intake and output of the heater for unobstructed entry and exit of air. Check the integrity of the fan and its operation. Check the sensor, replace if necessary.
17	**7**	Faulty fuel pump	Short circuit or open circuit in the wiring of the fuel pump	Check the wiring of the fuel pump for short circuit and open circuit. Check the wires to overheat sensor, insulation integrity.
20	**8**	Heater does not start	Burnt out fuses on the power harness.	Check the fuses and replace if necessary.
			No communication between the controller and the control unit. Controller receives no data from the control unit.	Check the connectors and the green wire in the connecting harness. Remove oxidation from connectors. Check the controller and the connecting harness, replace if necessary. If the controller is operational, replace the control unit.
27	**11**	Motor does not rotate	Damaged bearing or rotor, foreign objects, etc.	Check connectors and wiring leading to the electric motor board and the control unit. Eliminate the fault, if possible.
28		Motor rotates. Speed is not regulated.	Faulty electric motor control board or heater CU.	Replace air blower.
08 / 29	**3**	Flame failure during operation of the heater.	Insufficient fuel supply. Faulty fuel pump. Faulty flame indicator.	Check for leaks or clogging of fuel lines, tighten the clamps on the fuel lines. Check combustion air intake and exhaust pipe. Check the amount of fuel supplied by the fuel pump, and replace it if necessary. If the heater starts, check flame indicator and replace it if needed.
30		Heater does not start	No communication between the controller and the control unit. Control unit receives no data from the controller.	Check connectors and white wire in the connecting harness. Remove oxidation of connectors. Check controller and connecting harness, replace if necessary. If controller is operational, replace control unit.
31	**14**	Overheating of hot air outlet temperature sensor. *Only for AIR-8D.*	Hot air temperature sensor gives a signal to turn off the heater.	Check the temperature sensor *Only for AIR-8D*
32	**17**	Faulty temperature sensor at air intake.	Faulty temperature sensor at air intake.	Check connecting wires. Check sensor. *Only for AIR-8D*
33	**16**	Heater control is blocked	Error "Overheating" repeated three times.	See instructions for unblocking the heater. *Only for AIR-8D*
34	**19**	Wrong component assembly	One of the temperature sensors (intake, output or overheating) is installed in wrong location and gives wrong signal.	Check location of temperature sensors. Check sensors. *Only for AIR-8D*
35	**13**	Flame failure	Supply voltage drop.	Check the battery, wiring. (Voltage drop may occur due to prolonged use of electric starter) *Only for AIR-8D*
36	**20**	Flame indicator temperature above normal	Faulty flame indicator. Malfunction of the stabilizer in combustion chamber.	Check flame indicator. Inspect combustion chamber. *Only for AIR-8D*
78	**3**	Flame failure during operation.	Air bubble in fuel system. Faulty fuel pump. Faulty flame indicator.	Check fuel lines for leaks or clogging. Tighten fuel line hose clamps. Check combustion air intake and exhaust duct.

8 Warranty Terms

The warranty terms of exploitation of heater outflows under reaching one of the following terms:

- the terms of exploitation attained 24 months from the date of purchase;
- the warranty resource to all air heaters - 2000 working hours;
- the warranty resource to engine pre-heaters - 1000 working hours.

The warranty does not apply to defects resulting from:

- **improper installation, which is not in accordance with valid, supplied installation instructions or approved original equipment manufacturer (OEM) applications.**
- force majeure: lightning strike, fire, flood, voltage fluctuations, accident;
- transport damages;
- exploitation, storage and transporting rules have not been met;
- repair or adjusting, if they are conducted by the organizations, not authorized by AUTOTERM on installation of the heater and warranty repairing;
- independent repair of heater or use of spare parts not approved by original manufacturer;
- use of wrong voltage;
- Failure of the heater due to combustion chamber impurity.

While warranty is provided to the "original end-user", it is to be administered and serviced through an authorized AUTOTERM dealer in accordance with the heaters warranty terms. All AUTOTERM certified services are listed on www.autoterm-europe.com/warranty website.

Normal wear of service parts: (filters, gaskets, glow plug screens and fuses are not covered by warranty).

For full warranty terms visit www.autoterm-europe.com/warranty

Annex 1: Basic parameters & specifications of heaters

1. Basic parameters of the heater AIR-2D

Characteristics	**Models**	
	AIR 2D 12V	**AIR 2D 24V**
Rated voltage	12V	24V
Fuel	diesel fuel EN590, depending on the ambient temperature	
Heating output	0.8 – 2 kW	
Hot air flow	34 – 86 m^3/h	
Fuel consumption	0.10 – 0.24 l/h	
Power consumption	10 – 29 W	
Working/storage temperature	-45°C to +55°C	
Working altitude	up to 2500 m	
CO_2 in exhaust gases	< 12%	
Start-up and Shutdown	manual	
Heater dimensions	310 x 119 x 145 mm	
Weight of the heater	2.9 kg	

2. Basic parameters of the heater AIR-4D

Characteristics	**Models**	
	AIR 4D 12V	**AIR 4D 24V**
Rated voltage	12V	24V
Fuel	diesel fuel EN590, depending on the ambient temperature	
Heating output	1 - 4 kW	
Hot air flow	70 - 168 m^3/h	
Fuel consumption	0.12 - 0.51 l/h	
Power consumption	10 - 57 W	10 – 56 W
Working/storage temperature	-45°C to +55°C	
Working altitude	up to 2500 m	
CO_2 in exhaust gases	< 12%	
Start-up and Shutdown	manual	
Heater dimensions	402 x 157 x 188 mm	
Weight of the heater	5.4 kg	

3. Basic parameters of the heater AIR-8D

Characteristics	**Models**	
	AIR 8D 12V	**AIR 8D 24V**
Rated voltage	12V	24V
Fuel	diesel fuel EN590, depending on the ambient temperature	
Heating output	3.2 – 6 kW	3.2 – 7.5 kW
Hot air flow	70 – 336 m^3/h	
Fuel consumption	0.42 – 0.76 l/h	0.42 – 0.90 l/h
Power consumption	8 – 75 W	9 – 90 W
Working/storage temperature	-45°C to +55°C	
Working altitude	up to 1500 m	
CO_2 in exhaust gases	< 12%	
Start-up and Shutdown	manual	
Heater dimensions	550 x 208 x 295 mm	
Weight of the heater	11.8 kg	

4. Basic parameters of the heater AIR-9D

Characteristics	**Models**	
	AIR 9D 12V	**AIR 9D 24V**
Rated voltage	12V	24V
Fuel	diesel fuel EN590, depending on the ambient temperature	
Heating output	3.2 – 8 kW	
Hot air flow	70 – 413 m^3/h	
Fuel consumption	0.42 – 1.0 l/h	
Power consumption	12 – 290 W	12 – 210 W
Working/storage temperature	-45°C to +55°C	
Working altitude	up to 1500 m	
CO_2 in exhaust gases	< 12%	
Start-up and Shutdown	manual	
Heater dimensions	650 x 212 x 281 mm	
Weight of the heater	12.8 kg	

Annex 2: Connection diagrams of heaters

1. Connection diagram of the heater AIR-2D and AIR-4D

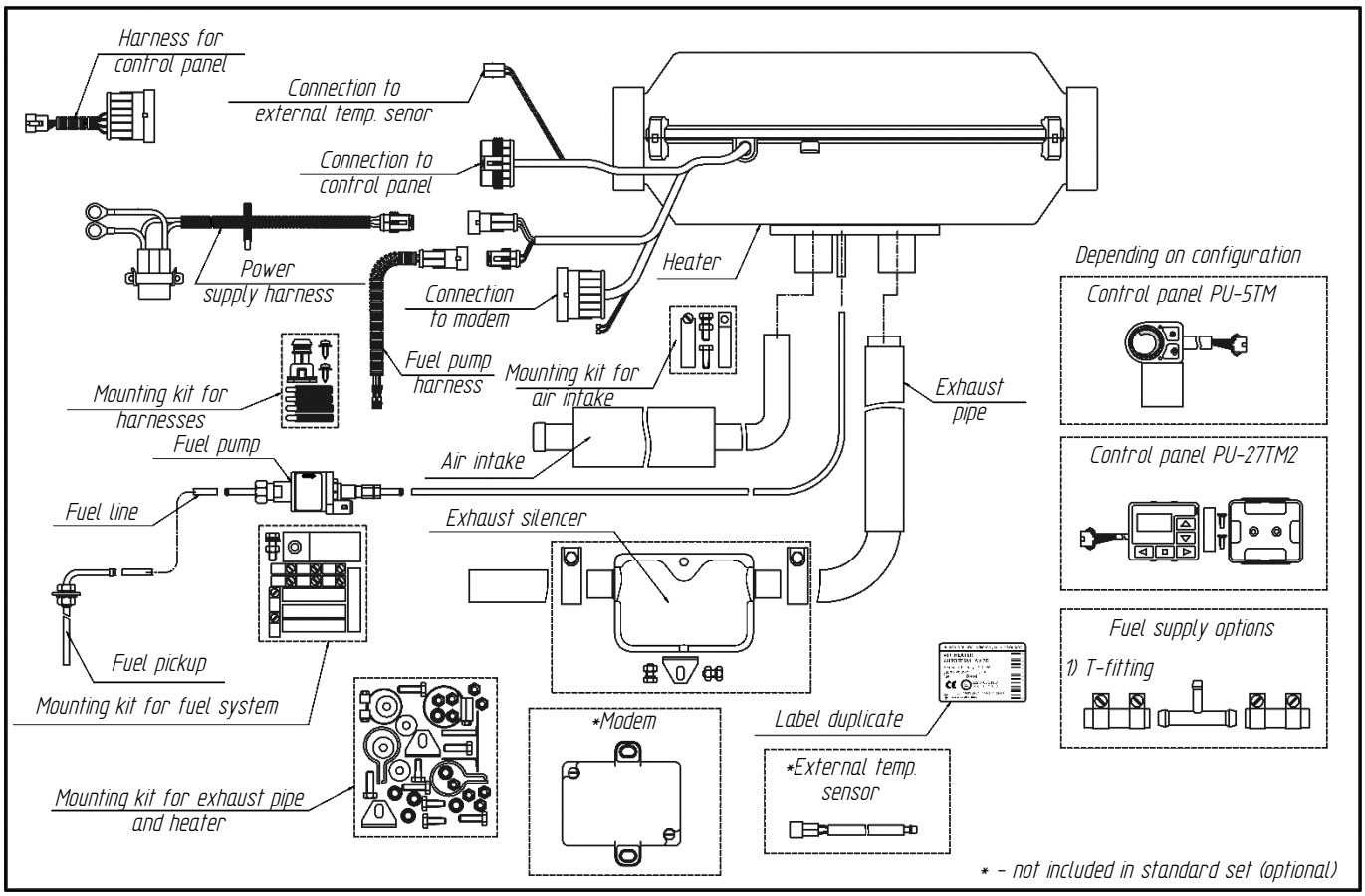

2. Connection diagram of the heater AIR-8D

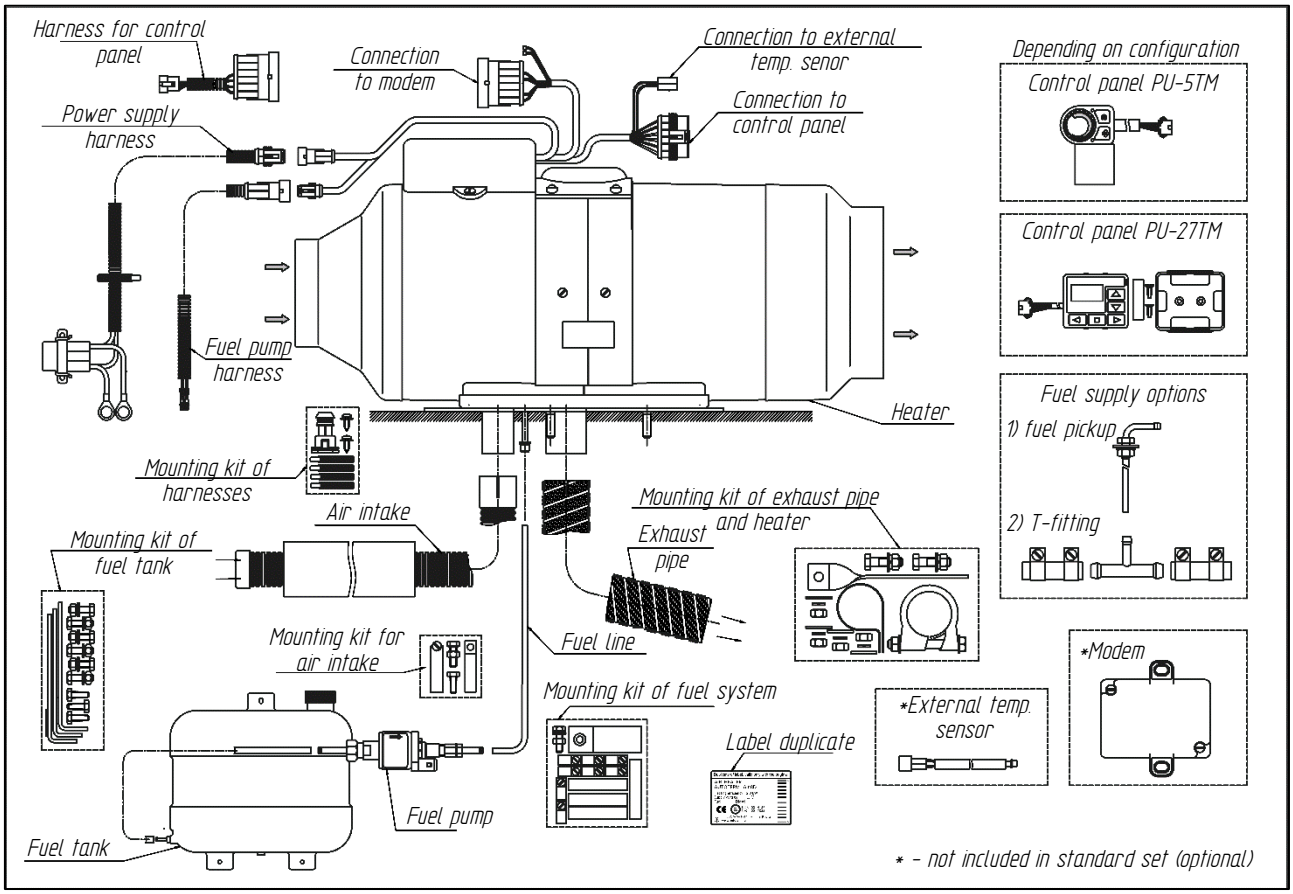

3. Connection diagram of the heater AIR-9D

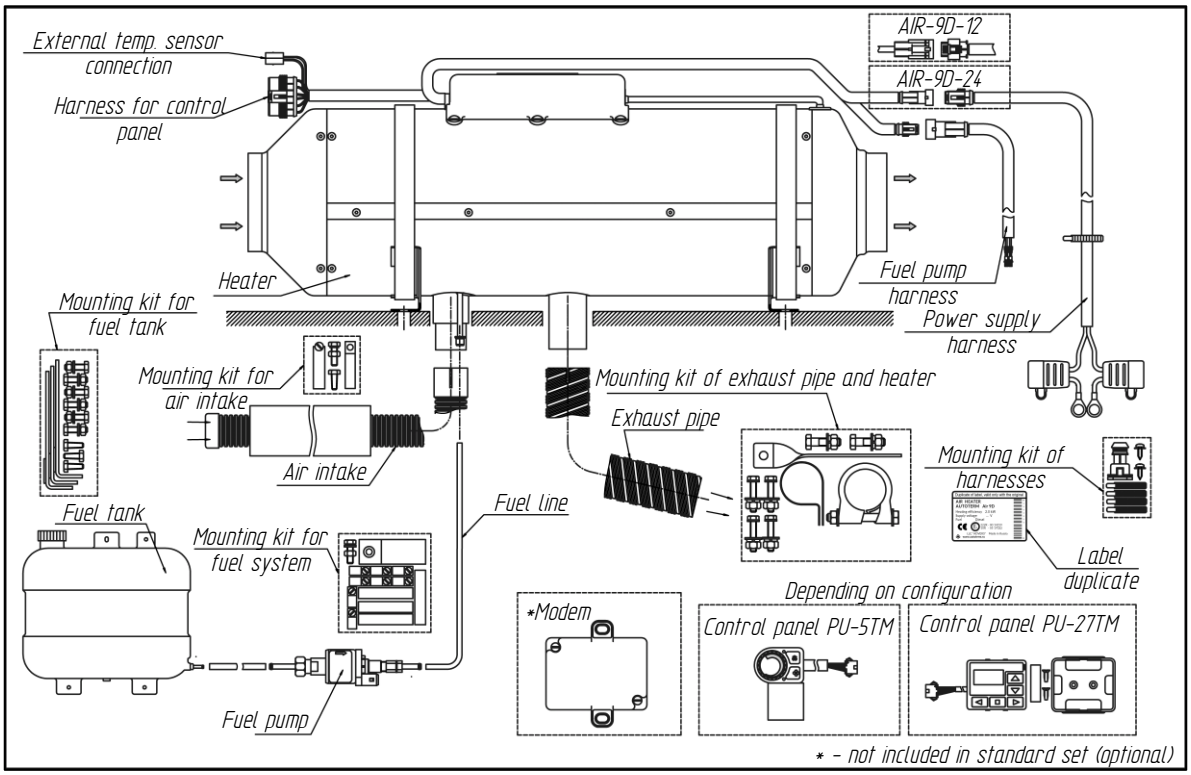

Annex 3: Size and dimensions of heaters

1. Size and dimensions of the heater AIR-2D

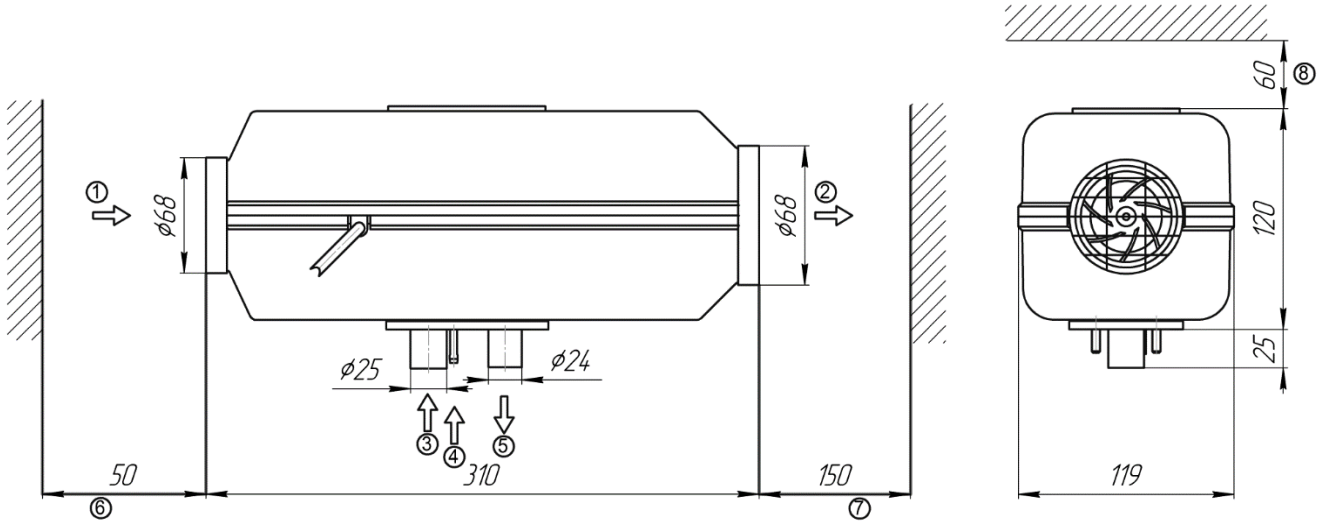

1 - Air intake for heating Ø68mm
2 - Output of the heated air Ø68mm
3 - Air intake for combustion
4 - Fuel supply
5 - Output of exhaust gases
6 - Minimal distance from wall/objects at air intake 50mm
7 - Minimal distance from wall/objects at air output 150mm
8 - Minimal distance from wall/objects from top of the heater 60mm

2. Size and dimensions of the heater AIR-4D

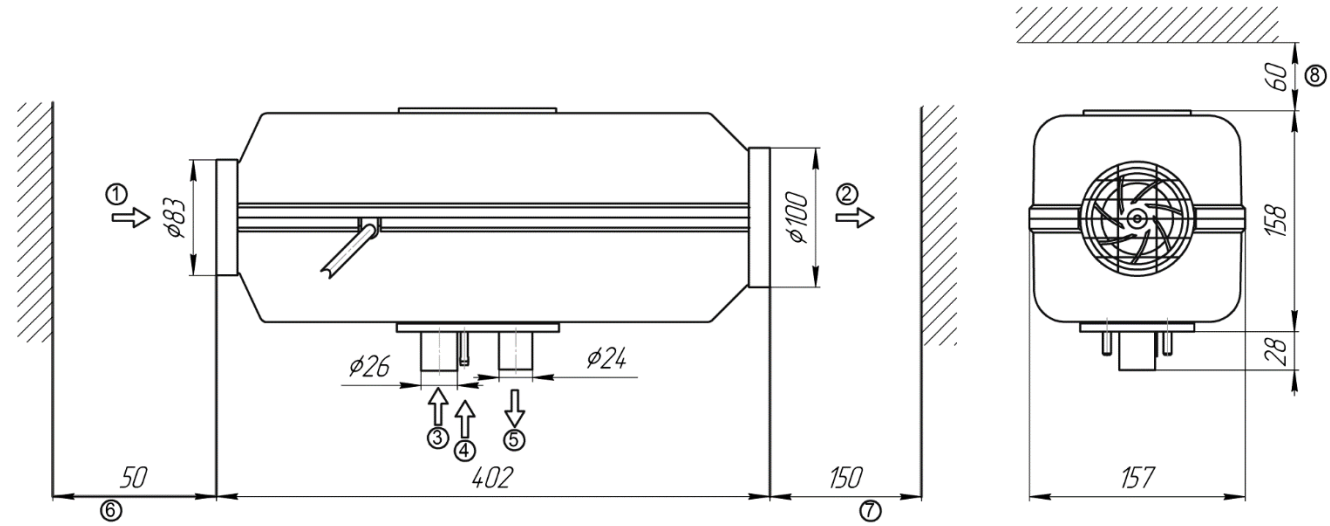

1 - Air intake for heating Ø83mm
2 - Output of the heated air Ø100mm
3 - Air intake for combustion
4 - Fuel supply
5 - Output of exhaust gases
6 - Minimal distance from wall/objects at air intake 50mm
7 - Minimal distance from wall/objects at air output 150mm
8 - Minimal distance from wall/objects from top of the heater 60mm

3. Size and dimensions of the heater AIR-8D

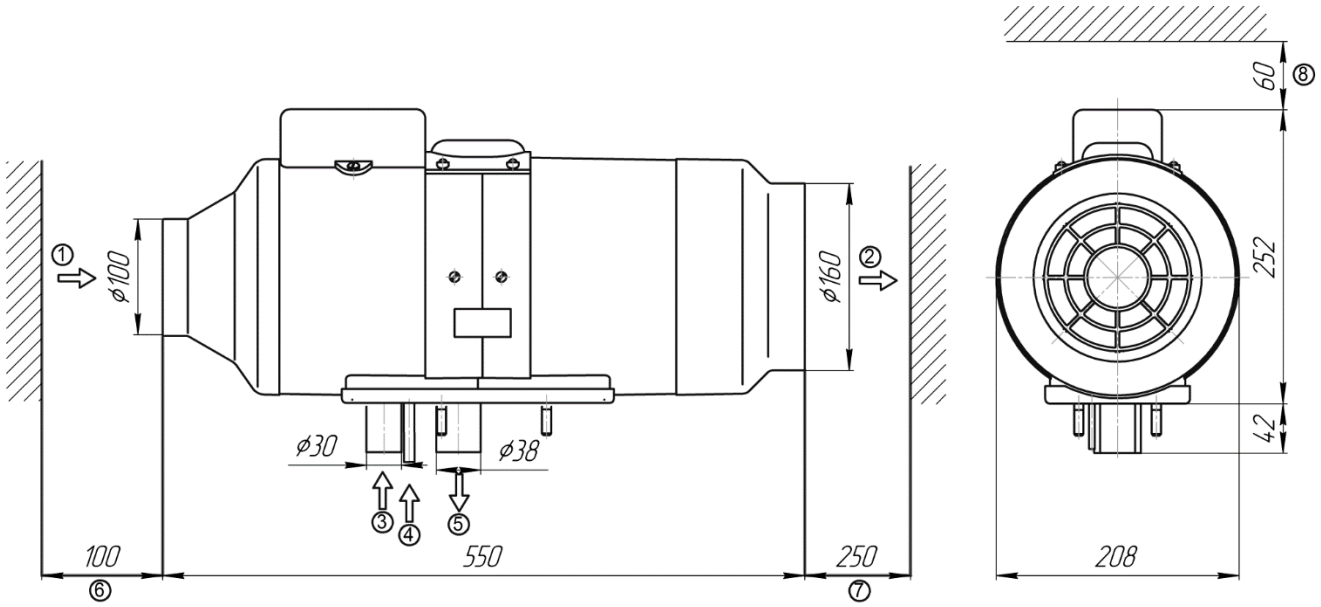

1 - Air intake for heating Ø100mm
2 - Output of the heated air Ø160mm
3 - Air intake for combustion
4 - Fuel supply
5 - Output of exhaust gases
6 - Minimal distance from wall/objects at air intake 100mm
7 - Minimal distance from wall/objects at air output 250mm
8 - Minimal distance from wall/objects from top of the heater 60mm

4. Size and dimensions of the heater AIR-9D

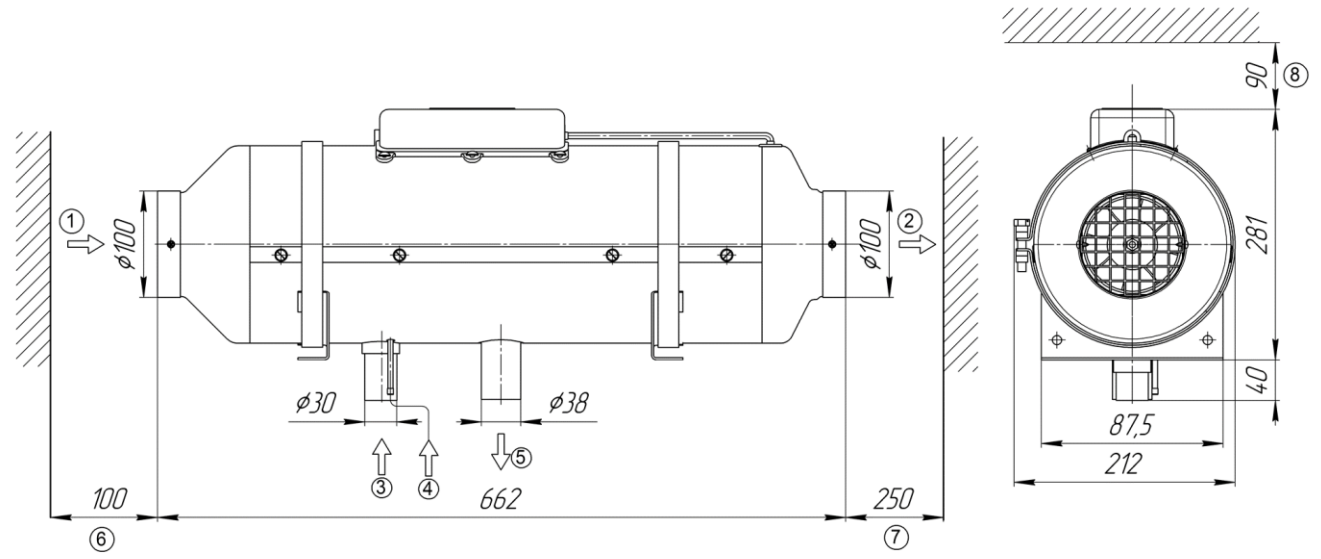

1 - Air intake for heating Ø100mm
2 - Output of the heated air Ø100mm
3 - Air intake for combustion
4 - Fuel supply
5 - Output of exhaust gases
6 - Minimal distance from wall/objects at air intake 100mm
7 - Minimal distance from wall/objects at air output 250mm
8 - Minimal distance from wall/objects from top of the heater 90mm

Annex 4: Electrical wiring diagrams of heaters

Heater can also be started with vehicle alarm wires in two ways:

- If brown and white wires are connected to an impulse relay (with an impulse between 1-3 seconds), heater will work on previously set work mode for two hours.
- When brown and white wire is connected continuously (for example, using a rocker switch) heater will work on previously set work mode as long as these wires are connected (i.e. rocker switch is on).

1. Electrical wiring diagram for the heater AIR-2D

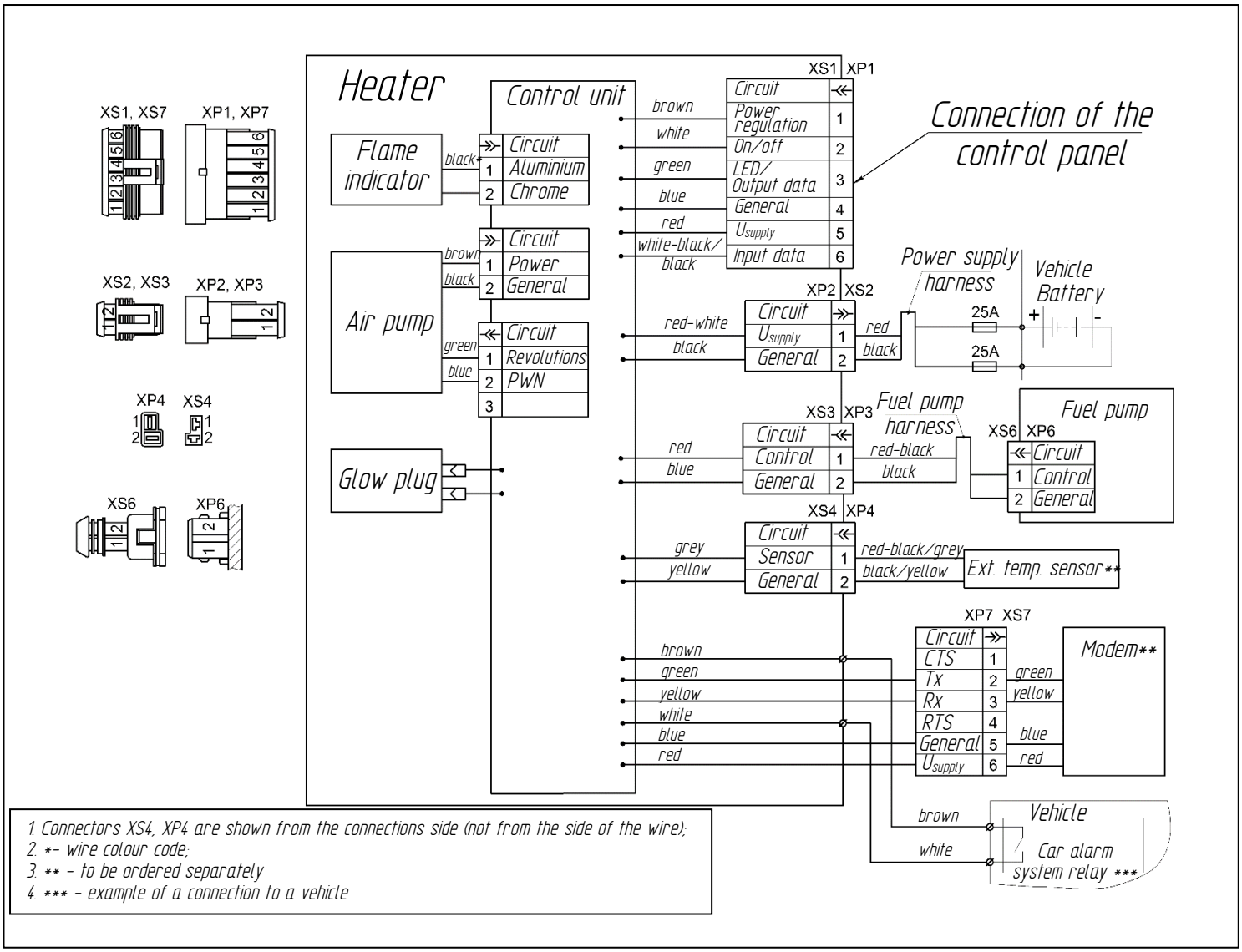

2. Electrical wiring diagram for the heater AIR-4D

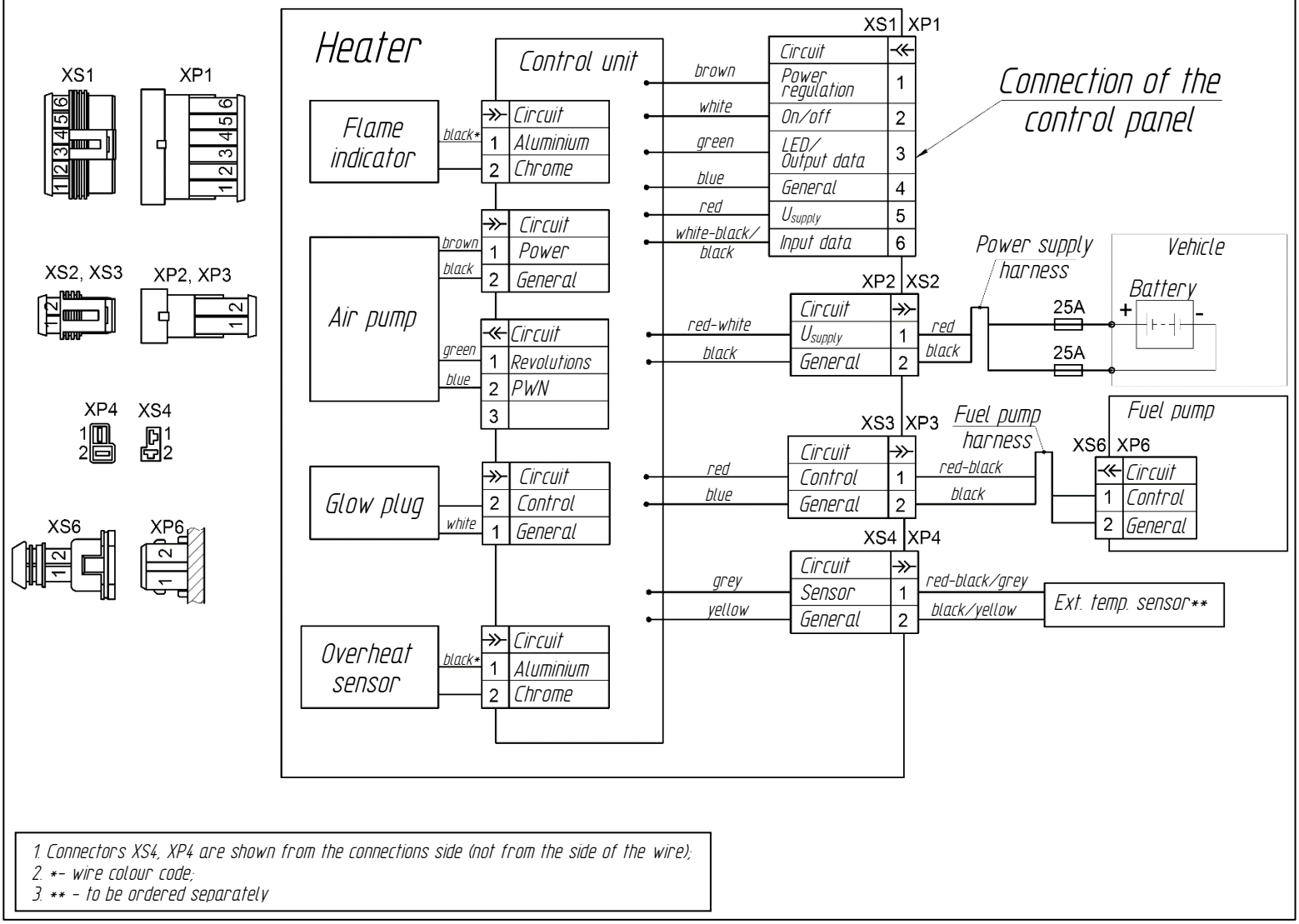

1. Connectors XS4, XP4 are shown from the connections side (not from the side of the wire);
2. *- wire colour code;
3. ** - to be ordered separately

3. Electrical wiring diagram for the heater AIR-8D

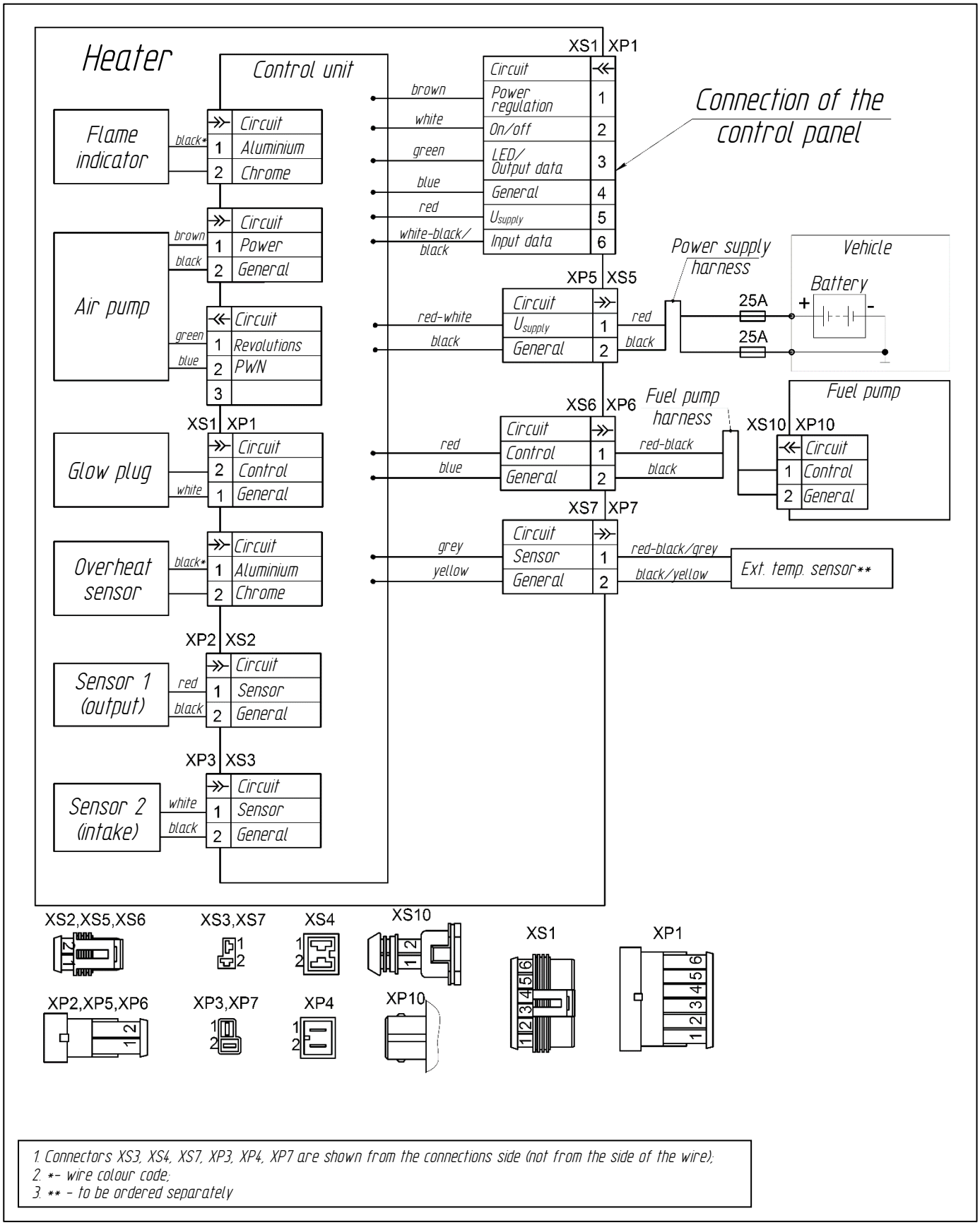

1. Connectors XS3, XS4, XS7, XP3, XP4, XP7 are shown from the connections side (not from the side of the wire);
2. *- wire colour code;
3. ** - to be ordered separately
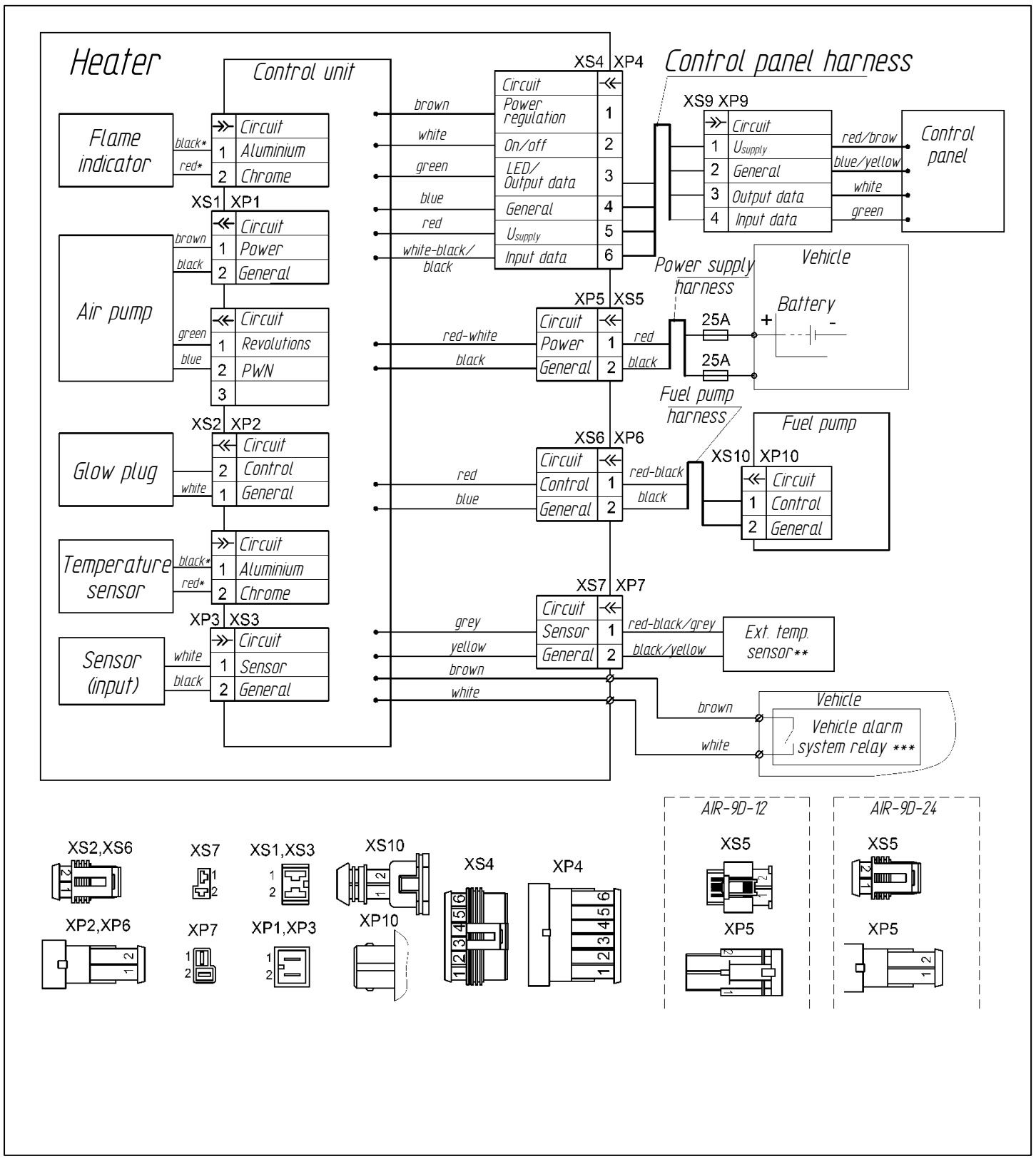
4. Electrical wiring diagram for the heater AIR-9D